A MEMBER OF
EURO-QUALIFLEX

EXPANSION JOINTS

info@ayvaz.com | www.ayvaz.com

METAL BELLOWED EXPANSION JOINTS

One of the basic rules of physics is materials to expand and compress caused by the temperature changes. Expansion joints are the elements that absorb all those expansions, compressions and also vibrations and let the industrial systems work continuously and efficiently.

Ayvaz metal bellowed expansion joints are designed and built using the latest CAD and production techniques. The main usage area of expansion joints are the pipeline applications.Our expansion joints are constatntly used to meet the such needs of industry;

- Safe operation
- Temperature and pressure resistance
- Easy assembly through flexibility
- Reliable connection
- Vacuum resistance
- Great service life and condition

Ayvaz is one of the biggest metal bellowed expansion joint manufacturers of Europe and the member of AEQ.

Our calculations are based on DIN EN and EJMA factors.

Purpose of Metal Bellowed Expansion Joints

Steel expansion joints are mainly used in appliances, machines, piping systems, pump outlet mechanism where the installation and maintenance space is limited. They are preffered to;

- Compensate the movement in specific direction
- Compensate the expansion and compression
- Reduce stress
- Prevent noise and oscillation transmission
- Compensate for ground and foundation settlement
- Eliminate the installation inaccuracies

Types of Metal Bellowed Expansion Joints

Expansion joints can be classified under three groups according to the types of movement to be absorbed.

1. Axial Expansion Joints
2. X-Pressed Axial Expansion Joints
3. Universal Tied, Dilatation Expansion Joints (Lateral)
4. Double Gimbal Type Expansion Joints (3D)
5. Vibration Absorbers
6. District Heating Expansion Joints
7. Braided Loop Joints
8. Pipe Expansion Joints
9. Rubber Expansion Joints

AXIAL EXPANSION JOINTS

Scan this QR Code

Axial expansion joints aim to absorb the axial expansions.

- They do not change the direction of the flow
- Additional assemblage distance is not necessary
- Dividing the pipeline helps to prevent stress of lateral forces

Working simulation of axial expansion joint

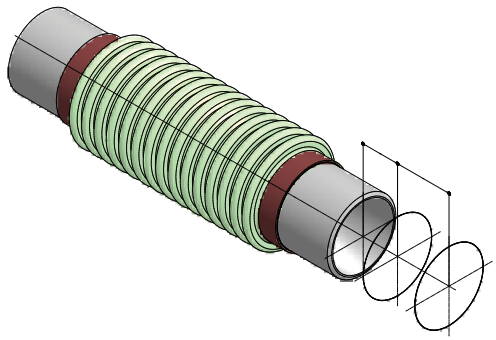

Movement Absorption

Axial shift and slight all-around movement of the expansion joint is possible. Axial expansion joints with two bellows are used to absorb larger movements.

Advantages of Axial Expansion Joints

- Easy to absorb the expansion movements
- No direction changes of the flow
- Minimum application area
- Possible lateral and angular expansion absorption by the additional bellows.
- To provide a non-stressed area where the pressure is not too high such as pump and compressor applications.
- Low application costs

DESIGN

Movement of axial expansion joint

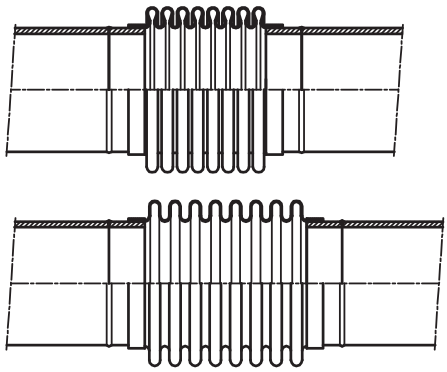

Structure

Bellow Material	Stainless Steel AISI 321 (opt.304,316L,316TI,309)
Connection Types	Fixed and Floating Flanged and Welded Ended
Flange Material	Carbon Steel St.37.2 as standard, the material can be customised on request
Inner Sleeve	Available in stainless steel AISI 321 (opt.304,316L,316TI,309) on request

Operation Conditions

Operating Temperature	-80C°/+600C°
Operating Pressure	Can be produced with different pressure rates PN 2,5/6/16/25/40/64
Nominal Diameters	DN 25 (1") - DN 2600 (104")

Axial Expansion Joint with 30mm expansion capacity without inner sleeve

Available Types (Standard Versions)

Name	Expansion Amount	Design Pressure	Definition
MKSF-30	-10/+20mm	16 bar	Axial Expansion Joint with 30mm expansion capacity and fixed flanges
MKDF-30	-10/+20mm	16 bar	Axial Expansion Joint with 30mm expansion capacity and floating flanges

* Special designed axial expansion joints with customized features are available on request.
** Subject to technical alterations and deviations resulting from the manufacturing process without giving any notification.

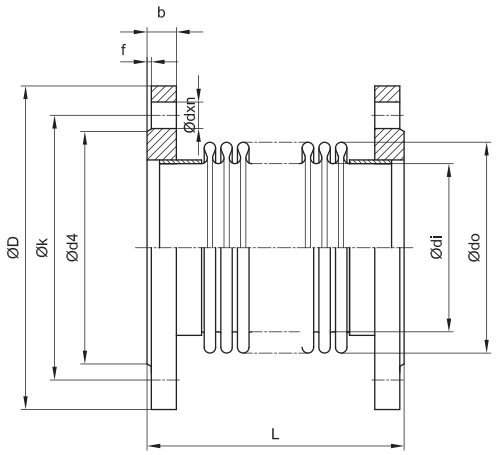

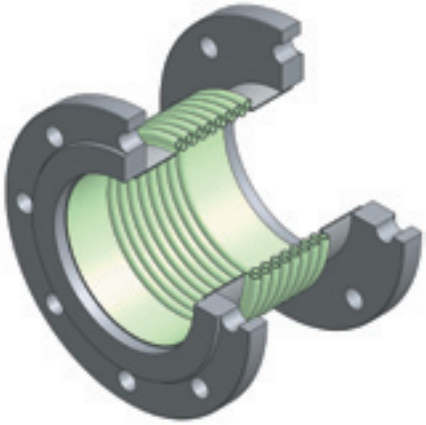

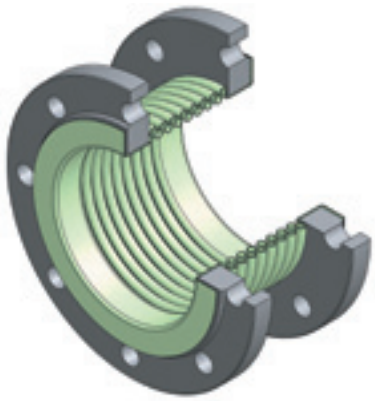

Flange (DIN EN 1092/1) PN 16							Bellow				MKSF-30		MKDF-30	
DN	ØD	Øk	Ød4	f	b	Ødxn	Ødi	Ødo	Effective Bellow Area cm^2	Axial Spring Rate N/mm	L	Code	L	Code
DN25	115	85	68	2	16	Ø 14x4	38	48,2	14,58	82,1	120	702.041.101.002	110	702.031.101.002
DN32	140	100	78	2	18	Ø 18x4	42,4	55	18,62	49,7	125	702.041.101.004	115	702.031.101.004
DN40	150	110	88	3	18	Ø 18x4	48,3	61	23,44	60,8	130	702.041.101.006	120	702.031.101.006
DN50	165	125	102	3	20	Ø 18x4	60,3	76	36,46	104,5	120	702.041.101.008	110	702.031.101.008
DN65	185	145	122	3	20	Ø 18x4	76,1	95	57,45	87,8	120	702.041.101.010	110	702.031.101.010
DN80	200	160	138	3	20	Ø 18x8	88,9	111	78,42	178,9	120	702.041.101.012	110	702.031.101.012
DN100	220	180	158	3	22	Ø 18x8	114,3	140	137,09	252,2	130	701.041.101.014	115	701.031.101.014
DN125	250	210	188	3	22	Ø 18x8	139,7	164	181,01	320,0	135	172.041.101.016	130	172.031.101.016
DN150	285	240	212	3	24	Ø 23x8	168,3	200	266,20	196,4	160	702.041.101.018	145	702.031.101.018
DN200	340	295	268	3	26	Ø 23x12	219,1	250	431,86	694,2	160	702.041.101.020	140	702.031.101.020
DN250	405	355	320	3	29	Ø 27x12	273	323	697,11	590,0	170	702.041.101.022	150	702.031.101.022
DN300	460	410	378	4	32	Ø 27x12	323,9	380	972,37	496,8	170	702.031.101.024	150	702.031.101.024

All the dimensions in the table are given in “mm“.
Other flange types made according to different standarts (ANSI, BS, UNI) are also available

Application of Fixed Points

By using axial expansion joints in pipeline applications, it will be possible to build up well structured and freely moving straight pipelines. Axial expansion absorption can only be possible with applying appropriate guides which are strong enough to meet the pressure at both ends.

Axial Expansion Joint with 30mm expansion capacity with inner sleeve

Available Types (Standard Versions)

Name	Expansion Amount	Design Pressure	Definition
MKSF-30L	-10/+20mm	16 bar	Axial Expansion Joint with 30mm expansion capacity and fixed flanges
MKDF-30L	-10/+20mm	16 bar	Axial Expansion Joint with 30mm expansion capacity and floating flanges

* Special designed axial expansion joints with customized features are available on request.
** Subject to technical alterations and deviations resulting from the manufacturing process without giving any notification.

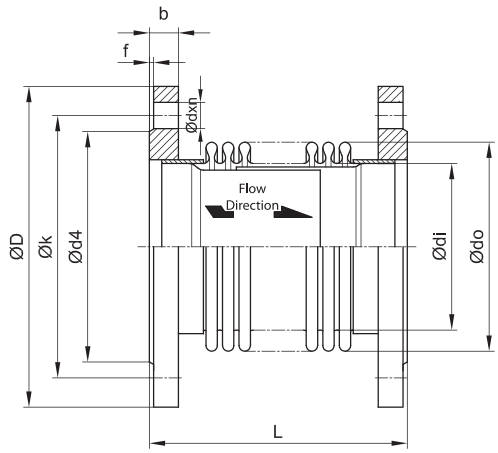

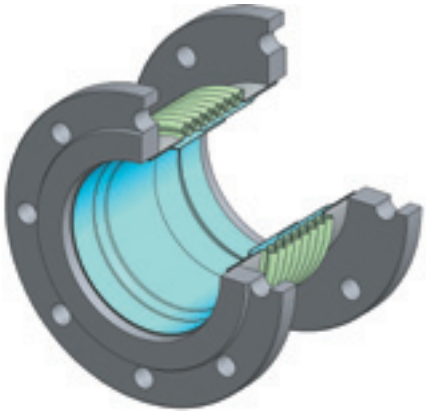

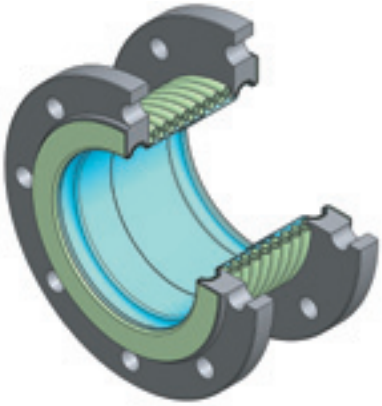

Flange (DIN EN 1092/1) PN 16							Bellow				MKSF-30L		MKDF-30L	
DN	ØD	Øk	Ød4	f	b	Ødxn	Ødi	Ødo	Effective Bellow Area cm^2	Axial Spring Rate N/mm	L	Code	L	Code
DN25	115	85	68	2	16	Ø 14x4	38	48,2	14,58	82,1	120	702.041.102.002	110	702.031.102.002
DN32	140	100	78	2	18	Ø 18x4	42,4	55	18,62	49,7	125	702.041.102.004	115	702.031.102.004
DN40	150	110	88	3	18	Ø 18x4	48,3	61	23,44	60,8	130	702.041.102.006	120	702.031.102.006
DN50	165	125	102	3	20	Ø 18x4	60,3	76	36,46	104,5	120	702.041.102.008	110	702.031.102.008
DN65	185	145	122	3	20	Ø 18x4	76,1	95	57,45	87,8	120	702.041.102.010	110	702.031.102.010
DN80	200	160	138	3	20	Ø 18x8	88,9	111	78,42	178,9	120	702.041.102.012	110	702.031.102.012
DN100	220	180	158	3	22	Ø 18x8	114,3	140	137,09	252,2	130	701.041.102.014	115	701.031.102.014
DN125	250	210	188	3	22	Ø 18x8	139,7	164	181,01	320,0	135	172.041.102.016	130	172.031.102.016
DN150	285	240	212	3	24	Ø 23x8	168,3	200	266,20	196,4	160	702.041.102.018	145	702.031.102.018
DN200	340	295	268	3	26	Ø 23x12	219,1	250	431,86	694,2	160	702.041.102.020	140	702.031.102.020
DN250	405	355	320	3	29	Ø 27x12	273	323	697,11	590,0	170	702.041.102.022	150	702.031.102.022
DN300	460	410	378	4	32	Ø 27x12	323,9	380	972,37	496,8	170	702.031.102.024	150	702.031.102.024

All the dimensions in the table are given in “mm“.
Other flange types made according to different standarts (ANSI, BS, UNI) are also available

Application of Fixed Points

By using axial expansion joints in pipeline applications, it will be possible to build up well structured and freely moving straight pipelines. Axial expansion absorption can only be possible with applying appropriate guides which are strong enough to meet the pressure at both ends.

Axial Expansion Joint with 60mm expansion capacity with inner sleeve

Available Types (Standard Versions)

Name	Expansion Amount	Design Pressure	Definition
MKSF-60L	-20/+40mm	16 bar	Axial Expansion Joint with 60mm expansion capacity and fixed flanges
MKDF-60L	-20/+40mm	16 bar	Axial Expansion Joint with 60mm expansion capacity and floating flanges

* Special designed axial expansion joints with customized features are available on request.
** Subject to technical alterations and deviations resulting from the manufacturing process without giving any notification.

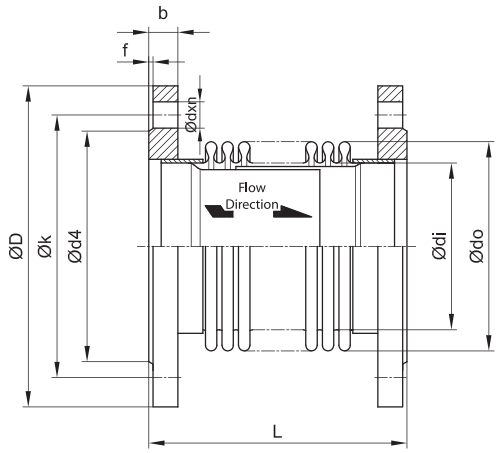

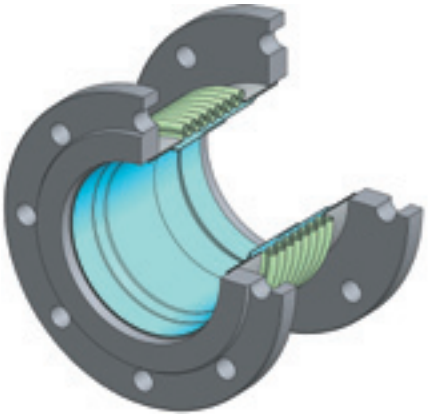

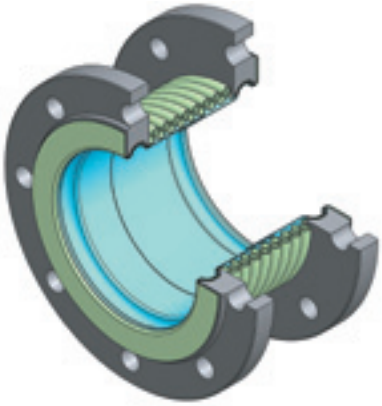

Flange (DIN EN 1092/1) PN 16							Bellow				MKSF-60L		MKDF-60L	
DN	ØD	Øk	Ød4	f	b	Ødxn	Ødi	Ødo	Effective Bellow Area cm^2	Axial Spring Rate N/mm	L	Code	L	Code
DN50	165	125	102	3	20	Ø 18x4	60,3	76	36,46	55,7	200	702.041.202.008	190	702.031.202.008
DN65	185	145	122	3	20	Ø 18x4	76,1	95	57,45	43,9	205	702.041.202.010	195	702.031.202.010
DN80	200	160	138	3	20	Ø 18x8	88,9	111	78,42	89,4	200	702.041.202.012	190	702.031.202.012
DN100	220	180	158	3	22	Ø 18x8	114,3	140	137,09	126,1	215	701.041.202.014	200	701.031.202.014
DN125	250	210	188	3	22	Ø 18x8	139,7	164	181,01	160,0	225	172.041.202.016	210	172.031.202.016
DN150	285	240	212	3	24	Ø 23x8	168,3	200	266,20	98,2	250	702.041.202.018	245	702.031.202.018
DN200	340	295	268	3	26	Ø 23x12	219,1	250	431,86	347,1	265	702.041.202.020	245	702.031.202.020
DN250	405	355	320	3	29	Ø 27x12	273	323	697,11	295,0	270	702.041.202.022	250	702.031.202.022
DN300	460	410	378	4	32	Ø 27x12	323,9	380	972,37	248,4	170	702.031.202.024	250	702.031.202.024

All the dimensions in the table are given in “mm“.
Other flange types made according to different standarts (ANSI, BS, UNI) are also available

Application of Fixed Points

By using axial expansion joints in pipeline applications, it will be possible to build up well structured and freely moving straight pipelines. Axial expansion absorption can only be possible with applying appropriate guides which are strong enough to meet the pressure at both ends.

Axial Expansion Joint with Welded ends

Available Types (Standard Versions)

Name	Expansion Amount	Design Pressure	Definition
MKKB-30	-10/+20mm	16 bar	Axial Expansion Joint with 30mm expansion capacity
MKKB-30L	-10/+20mm	16 bar	Axial Expansion Joint with 30mm expansion capacity and inner sleeve
MKKB-60L	-20/+40mm	16 bar	Axial Expansion Joint with 60mm expansion capacity and inner sleeve

* Special designed axial expansion joints with customized features are available on request.
** Subject to technical alterations and deviations resulting from the manufacturing process without giving any notification.

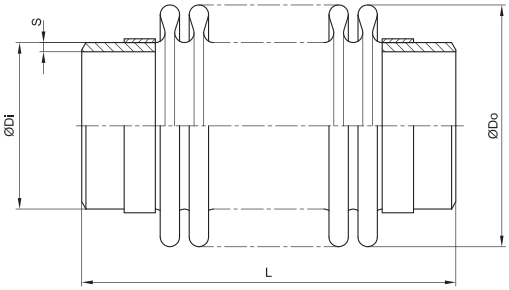

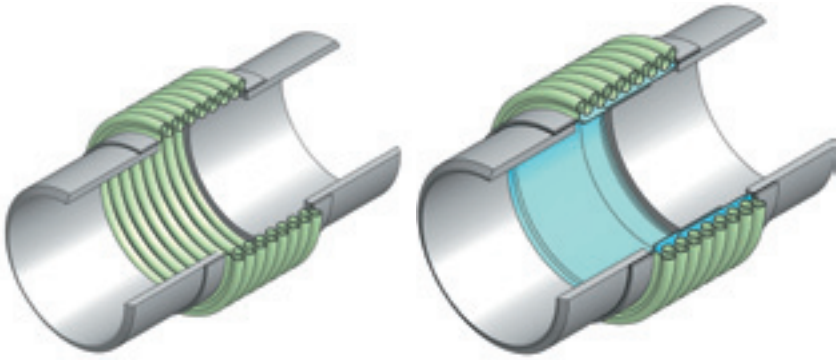

DN	Bellow				S	MKKB-30		MKKB-30L		MKKB-60L	
	ØDi	ØDo	Effective Bellow Area cm^2	Axial Spring Rate N/mm		L	Code	L	Code	L	Code
DN25	38	48.8	14,58	82,1	2.6	210	702.051.101.006	210	702.051.102.006		
DN32	42.4	55.6	18,62	49,7	2.6	215	702.051.101.008	215	702.051.102.008		
DN40	48.3	61.5	23,44	60,8	2.6	220	702.051.101.010	220	702.051.102.010		
DN50	60.3	76.9	36,46	104,5	2.9	210	702.051.101.012	210	702.051.102.012	290	702.051.202.012
DN65	76.1	95.9	57,45	87,8	2.9	210	701.051.101.014	210	701.051.102.014	285	701.051.202.014
DN80	88.9	112.1	78,42	178,9	3.2	215	172.051.101.016	215	172.051.102.016	300	172.051.202.016
DN100	114.3	140.9	137,09	252,2	3.6	215	702.051.101.018	215	702.051.102.018	300	702.051.202.018
DN125	139.7	165.7	181,01	320,0	4	220	702.051.101.020	220	702.051.102.020	310	702.051.202.020
DN150	168.3	201.1	266,20	196,4	4.5	245	702.051.101.022	245	702.051.102.022	345	702.051.202.022
DN200	219.1	252.3	431,86	694,2	6.3	235	702.051.101.024	235	702.051.102.024	340	702.051.202.024
DN250	273	325.8	697,11	590,0	6.3	240	702.051.101.026	240	702.051.102.026	340	702.051.202.026
DN300	323.9	382.9	972,37	496,8	7.1	250	702.051.101.028	250	702.051.102.028	340	702.051.202.028

All the dimensions in the table are given in “mm“.

Application of Fixed Points

By using axial expansion joints in pipeline applications, it will be possible to build up well structured and freely moving straight pipelines. Axial expansion absorption can only be possible with applying appropriate guides which are strong enough to meet the pressure at both ends.

X-PRESSED AXIAL EXPANSION JOINTS

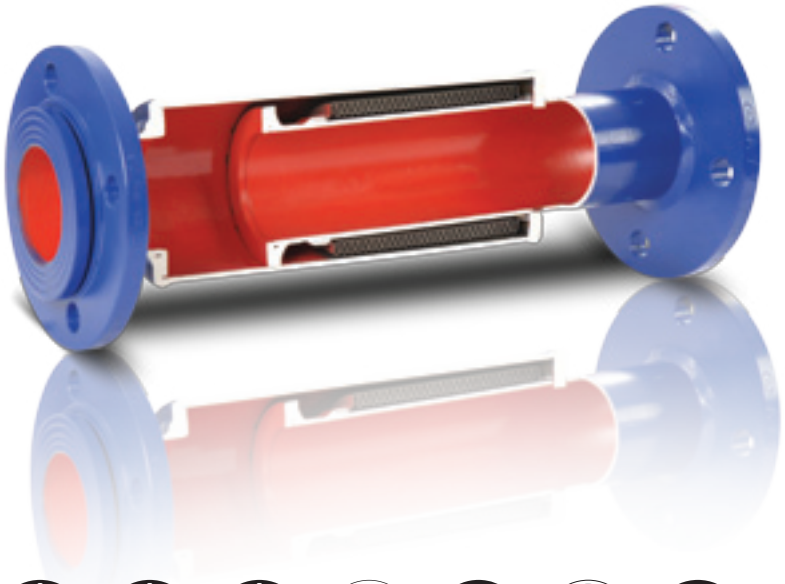

Scan this QR Code

Compensating larger amount of thermal expansions by axial expansion joints are only possible by increasing the number of corrugations of the bellow, but this increases the possibility of torsion. Applying inner sleeves may reduce the torsion but they also reduce the movement ability of the expansion joints. Ayvaz's Externally pressurized expansion joints provide the most suitable solution for such cases.

Movement Absorption

X-pressed expansion joints change the direction of the flow and convey the pressure to the bellows externally. Resistance of externally pressurized bellows against high pressure and torsion forces increases. This firm structure makes compensating large movements possible safely.

Advantages of X-Pressed Expansion Joints

- Easy to absorb large expansion movements
- Reducing the number of axial expansion joints saves on time and cost
- Minimum application area
- Preventing axial inaccuracies increases the system safety
- Using internal guide rings in their design provides highly stable structure for connections

DESIGN

Structure

Bellow Material	Stainless Steel AISI 321 (opt.304,316L,316TI,309)
Pipe Material	Carbon Steel St.37.2 as standard, the material can be customised on request
Connection Types	Fixed and Floating Flanged and Welded End
Flange Material	Carbon Steel St.37.2 as standard, the material can be customised on request
Inner Sleeve	Available in stainless steel AISI 321 (opt.304,316L,316TI,309) on request

Operation Conditions

Operating Temperature	-80C°/+600C°
Operating Pressure	Can be produced with different pressure rates PN 2,5/6/16/25/40/64
Nominal Diameters	DN 25 (1")- DN 1500 (60")

X-Pressed Expansion Joints with Fixed flange and Floating Flange on the other end

Available Types (Standard Versions)

Name	Expansion Amount	Design Pressure	Definition
DBKF-30	-10/+20mm	16 bar	X-Pressed Expansion Joint with 30mm expansion capacity and Flanged
DBKF-60	-20/+40mm	16 bar	X-Pressed Expansion Joint with 60mm expansion capacity and Flanged
DBKF-90	-30/+60mm	16 bar	X-Pressed Expansion Joint with 90mm expansion capacity and Flanged
DBKF-120	-40/+80mm	16 bar	X-Pressed Expansion Joint with 120mm expansion capacity and Flanged

* Special designed X-Pressed expansion joints with customized features are available on request.
** Subject to technical alterations and deviations resulting from the manufacturing process without giving any notification.

DBKF-30 & DBKF-60

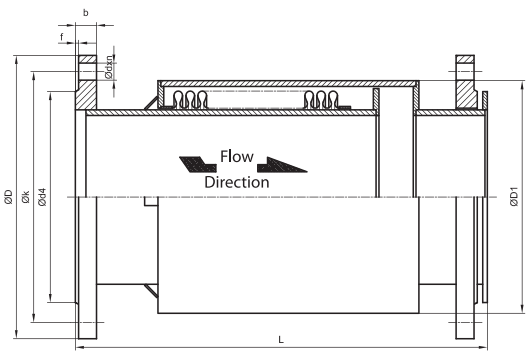

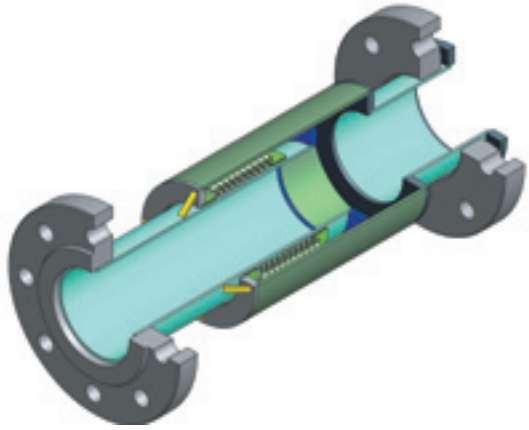

Flange (DIN EN 1092/1) PN 16							Bellow			DBKF-30			DBKF-60		
DN	ØD	Øk	Ød4	f	b	Ødxn	Ødi	Ødo	Effective Bellow Area cm²	L	Axial Spring Rate N/mm	Code	L	Axial Spring Rate N/mm	Code
DN25	115	85	68	2	16	Ø 14x4	38	48,2	14,58	360	82,1	702.060.201.002	490	41,1	702.060.202.002
DN32	140	100	78	2	18	Ø 18x4	42,4	55	18,62	360	49,7	702.060.201.004	490	24,8	702.060.202.004
DN40	150	110	88	3	18	Ø 18x4	48,3	61	23,44	380	60,8	702.060.201.006	500	30,4	702.060.202.006
DN50	165	125	102	3	20	Ø 18x4	60,3	76	36,46	370	104,5	702.060.201.008	480	55,7	702.060.202.008
DN65	185	145	122	3	20	Ø 18x4	76,1	95	57,45	370	87,8	702.060.201.010	470	43,9	702.060.202.010
DN80	200	160	138	3	20	Ø 18x8	88,9	111	78,42	370	178,9	702.060.201.012	470	89,4	702.060.202.012
DN100	220	180	158	3	22	Ø 18x8	114,3	140	137,09	380	252,2	702.060.201.014	480	126,1	702.060.202.014
DN125	250	210	188	3	22	Ø 18x8	139,7	164	181,01	380	320,0	702.060.201.016	490	160,0	702.060.202.016
DN150	285	240	212	3	24	Ø 23x8	168,3	200	266,20	400	196,4	702.060.201.018	510	98,2	702.060.202.018
DN200	340	295	268	3	26	Ø 23x12	219,1	250	431,86	420	694,2	702.060.201.020	530	347,1	702.060.202.020
DN250	405	355	320	3	29	Ø 27x12	273	323	697,11	440	590,0	702.060.201.022	540	295,0	702.060.202.022
DN300	460	410	378	4	32	Ø 27x12	323,9	380	972,37	460	496,8	702.060.201.024	570	248,4	702.060.202.024

All the dimensions in the table are given in “mm“.
Other flange types made according to different standarts (ANSI, BS, UNI) are also available

Application of Fixed Points

By using Externally pressurized axial expansion joints in pipeline applications, it will be possible to build up well structured and freely moving straight pipelines. Externally pressurized axial expansion absorption can only be possible with applying appropriate guides which are strong enough to meet the pressure at both ends.

X-Pressed Expansion Joints with Fixed flange and Floating Flange on the other end

DBKF-90 & DBKF-120

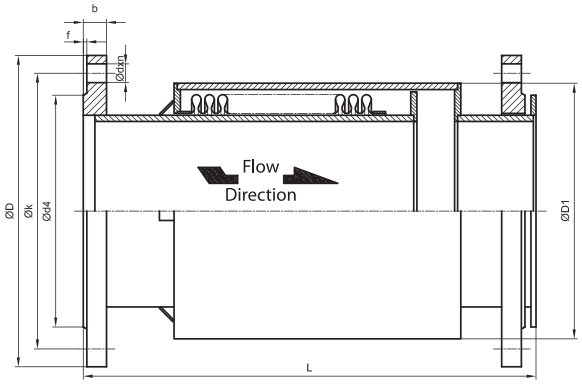

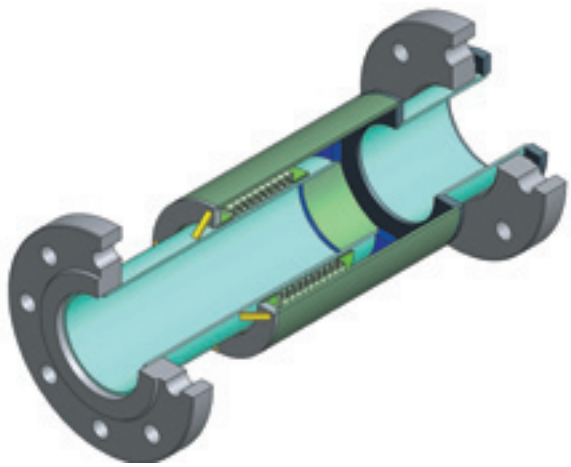

Flange (DIN EN 1092/1) PN 16							Bellow			DBKF-90			DBKF-120		
DN	ØD	Øk	Ød4	f	b	Ødxn	Ødi	Ødo	Effective Bellow Area cm²	L	Axial Spring Rate N/mm	Code	L	Axial Spring Rate N/mm	Code
DN25	115	85	68	2	16	Ø 14x4	38	48,2	14,58	520	41,1	702.060.203.002	600	34,2	702.060.204.002
DN32	140	100	78	2	18	Ø 18x4	42,4	55	18,62	520	24,8	702.060.203.004	660	17,7	702.060.204.004
DN40	150	110	88	3	18	Ø 18x4	48,3	61	23,44	530	30,4	702.060.203.006	680	20,3	702.060.204.006
DN50	165	125	102	3	20	Ø 18x4	60,3	76	36,46	510	55,7	702.060.203.008	680	32,1	702.060.204.008
DN65	185	145	122	3	20	Ø 18x4	76,1	95	57,45	500	43,9	702.060.203.010	740	23,6	702.060.204.010
DN80	200	160	138	3	20	Ø 18x8	88,9	111	78,42	500	89,4	702.060.203.012	650	55,9	702.060.204.012
DN100	220	180	158	3	22	Ø 18x8	114,3	140	137,09	510	126,1	702.060.203.014	690	78,8	702.060.204.014
DN125	250	210	188	3	22	Ø 18x8	139,7	164	181,01	520	160	702.060.203.016	700	100	702.060.204.016
DN150	285	240	212	3	24	Ø 23x8	168,3	200	266,20	540	98,2	702.060.203.018	700	70,1	702.060.204.018
DN200	340	295	268	3	26	Ø 23x12	219,1	250	431,86	560	347,1	702.060.203.020	770	198,3	702.060.204.020
DN250	405	355	320	3	29	Ø 27x12	273	323	697,11	570	295	702.060.203.022	830	177	702.060.204.022
DN300	460	410	378	4	32	Ø 27x12	323,9	380	972,37	600	248,4	702.060.203.024	810	149	702.060.204.024

All the dimensions in the table are given in “mm“.
Other flange types made according to different standarts (ANSI, BS, UNI) are also available

Application of Fixed Points

By using Externally pressurized axial expansion joints in pipeline applications, it will be possible to build up well structured and freely moving straight pipelines. Externally pressurized axial expansion absorption can only be possible with applying appropriate guides which are strong enough to meet the pressure at both ends.

X-Pressed Expansion Joints with Welded Ends

Available Types (Standard Versions)

Name	Expansion Amount	Design Pressure	Definition
DBKK-30	-10/+20mm	16 bar	X-Pressed Expansion Joint with 30mm expansion capacity and welded ends
DBKK-60	-20/+40mm	16 bar	X-Pressed Expansion Joint with 60mm expansion capacity and welded ends
DBKK-90	-30/+60mm	16 bar	X-Pressed Expansion Joint with 90mm expansion capacity and welded ends
DBKK-120	-40/+80mm	16 bar	X-Pressed Expansion Joint with 120mm expansion capacity and welded ends

* Special designed X-Pressed expansion joints with customized features are available on request.
** Subject to technical alterations and deviations resulting from the manufacturing process without giving any notification.

DBKK-30 & DBKK-60

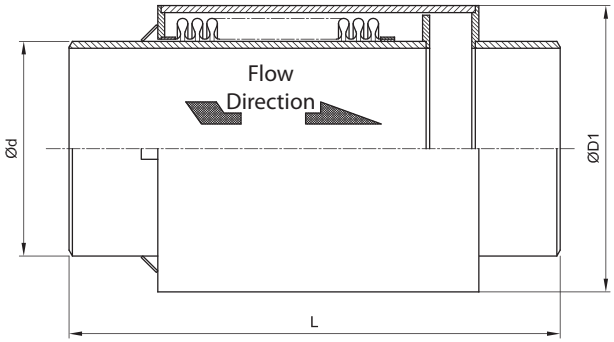

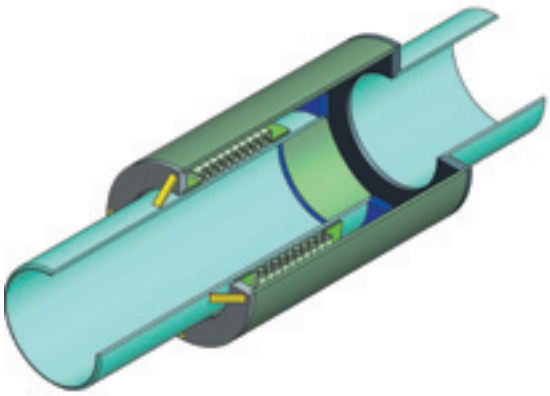

DN	Bellow			DBKK-30			DBKK-60		
	Ød	ØD1	Effective Bellow Area cm^2	L	Axial Spring Rate N/mm	Code	L	Axial Spring Rate N/mm	Code
DN25	38	76,1	14,58	340	82,1	702.060.101.002	470	41,1	702.060.102.002
DN32	42,4	76,1	18,62	340	49,7	702.060.101.004	470	24,8	702.060.102.004
DN40	48,3	76,1	23,44	360	60,8	702.060.101.006	480	30,4	702.060.102.006
DN50	60,3	101	36,46	350	104,5	702.060.101.008	460	55,7	702.060.102.008
DN65	76,1	114,3	57,45	350	87,8	702.060.101.010	450	43,9	702.060.102.010
DN80	88,9	139,7	78,42	350	178,9	702.060.101.012	450	89,4	702.060.102.012
DN100	114,3	168,3	137,09	360	252,2	702.060.101.014	460	126,1	702.060.102.014
DN125	139,7	219,1	181,01	360	320,0	702.060.101.016	470	160	702.060.102.016
DN150	168,3	245	266,20	380	196,4	702.060.101.018	490	98,2	702.060.102.018
DN200	219,1	323,9	431,86	400	694,2	702.060.101.020	510	347,1	702.060.102.020
DN250	273	355,6	697,11	420	590,0	702.060.101.022	520	295	702.060.102.022
DN300	323,9	406,4	972,37	440	496,8	702.060.101.024	550	248,4	702.060.102.024

All the dimensions in the table are given in “mm“.

Application of Fixed Points

By using Externally pressurized axial expansion joints in pipeline applications, it will be possible to build up well structured and freely moving straight pipelines. Externally pressurized axial expansion absorption can only be possible with applying appropriate guides which are strong enough to meet the pressure at both ends.

X-Pressed Expansion Joints with Welded Ends

DBKK-90 & DBKK-1200

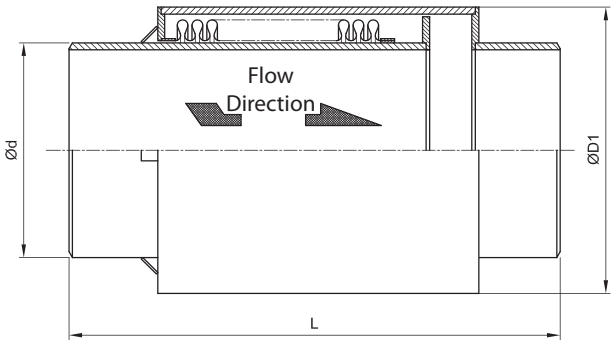

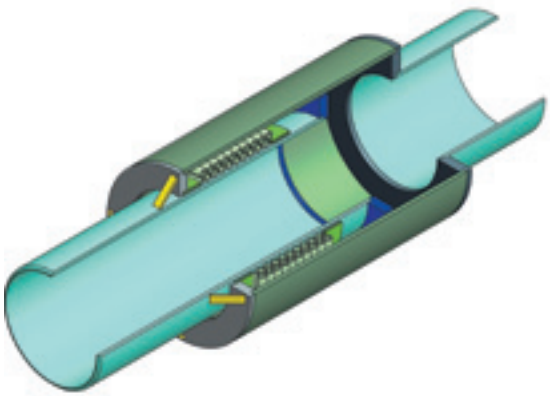

DN	Bellow			DBKK-90			DBKK-120		
	Ød	ØD1	Effective Bellow Area cm^2	L	Axial Spring Rate N/mm	Code	L	Axial Spring Rate N/mm	Code
DN25	38	76,1	14,58	500	41,1	702.060.103.002	580	34,2	702.060.104.002
DN32	42,4	76,1	18,62	500	24,8	702.060.103.004	640	17,7	702.060.104.004
DN40	48,3	76,1	23,44	510	30,4	702.060.103.006	660	20,3	702.060.104.006
DN50	60,3	101	36,46	490	55,7	702.060.103.008	660	32,1	702.060.104.008
DN65	76,1	114,3	57,45	480	43,9	702.060.103.010	720	23,6	702.060.104.010
DN80	88,9	139,7	78,42	480	89,4	702.060.103.012	630	55,9	702.060.104.012
DN100	114,3	168,3	137,09	490	126,1	702.060.103.014	670	78,8	702.060.104.014
DN125	139,7	219,1	181,01	500	160	702.060.103.016	680	100	702.060.104.016
DN150	168,3	245	266,20	520	98,2	702.060.103.018	680	70,1	702.060.104.018
DN200	219,1	323,9	431,86	540	347,1	702.060.103.020	750	198,3	702.060.104.020
DN250	273	355,6	697,11	550	295	702.060.103.022	810	177	702.060.104.022
DN300	323,9	406,4	972,37	580	248,4	702.060.103.024	790	149	702.060.104.024

All the dimensions in the table are given in “mm“.

Application of Fixed Points

By using Externally pressurized axial expansion joints in pipeline applications, it will be possible to build up well structured and freely moving straight pipelines. Externally pressurized axial expansion absorption can only be possible with applying appropriate guides which are strong enough to meet the pressure at both ends.

UNIVERSAL TIED EXPANSION JOINTS

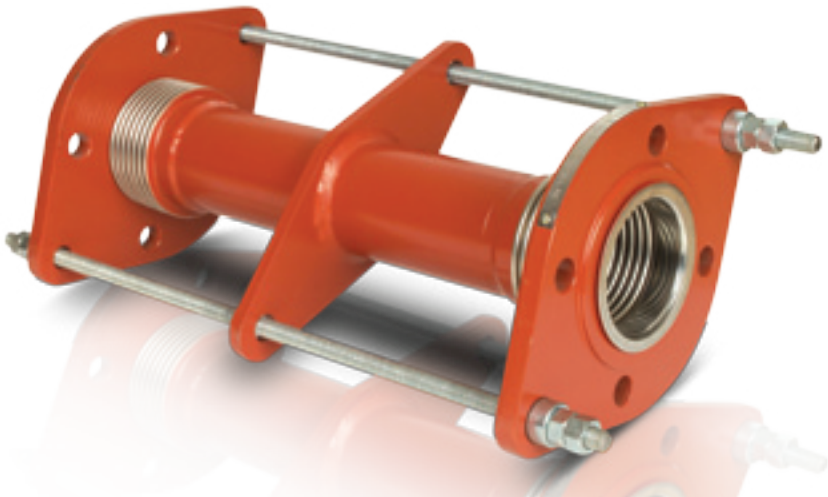

Scan this QR Code

The movements occured in two directions can only be absorbed by using Lateral Epansion Joints. Universal tied expansion joints are made up of two bellows connected each other by an intermediate pipe and a system of tie rods able to withstand the thrust resulted of the internal pressure.

Movement Absorption

This type of expansion joints are used to absorb lateral movements in all planes. Also, with a special positioning of two tie rods at 180 degrees, the expansion joints bocomes able to absorb some lateral and angular deflections at the same time.

The amount of lateral deflection depends on the convolution number of the bellows on each side of the expansion joint. This amount can also be increased by changing the length of the intermediate pipe. The tie rods are also effective to prevent possible torsion forces.

Advantages of Universal Tied Expansion Joints

- Absorption of lateral movements in all planes
- Easy to absorb large expansion movements
- Minimum application area
- Preventing axial inaccuracies increases the system safety

DESIGN

Structure

Bellow Material	Stainless Steel AISI 321 (opt.304,316L,316TI,309)
Connection Types	Fixed Flanged and Welded End
Flange Material	Carbon Steel St.37.2 as standard, the material can be customised on request
Intermediate Pipe Material	Carbon Steel St.37.2 as standard, the material can be customised on request
Tie Rod Material	Carbon Steel St.37.2 as standard, the material can be customised on request

Operation Conditions

Operating Temperature	-80°C/+600°C
Operating Pressure	PN 2,5/6/16/25/40/64
Nominal Diameters	DN25 (1") - DN1000 (40")

Universal Tied Expansion Joints, Flanged

Available Types (Standard Versions)

Name	Axial Expansion Amount	Lateral Expansion Amount	Design Pressure	Definition
DLTKF-25	±15/30mm	±25mm	16 bar	Universal Tied Expansion Joint with 25mm lateral expansion,flanged
DLTKF-50	±15/30mm	±50mm	16 bar	Universal Tied Expansion Joint with 50mm lateral expansion,flanged
DLTKF-75	±15/30mm	±75mm	16 bar	Universal Tied Expansion Joint with 75mm lateral expansion,flanged
DLTKF-100	±15/30mm	±100mm	16 bar	Universal Tied Expansion Joint with 100mm lateral expansion,flanged

* Special designed Universal Tied Expansion Joints with customized features are available on request.
** Subject to technical alterations and deviations resulting from the manufacturing process without giving any notification.

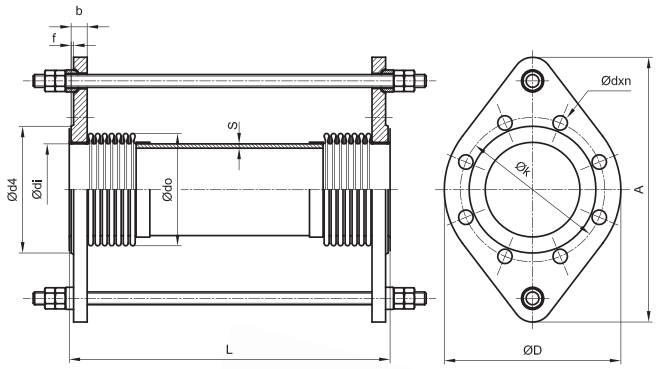

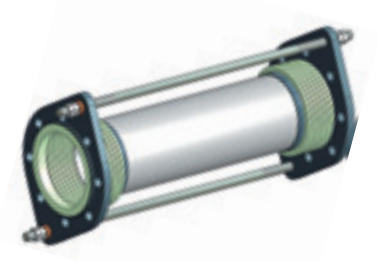

Flange (DIN EN 1092/1) PN 16								
DN	A	ØD	Øk1	k2	Ød4	f	b	Ødxn
DN25	185	115	85	150	68	2	16	Ø14x4
DN32	210	140	100	180	78	2	18	Ø18x4
DN40	220	150	110	185	88	3	18	Ø18x4
DN50	250	165	125	205	102	3	20	Ø18x4
DN65	270	185	145	225	122	3	20	Ø18x4
DN80	310	200	160	251	138	3	20	Ø18x8
DN100	330	220	180	271	158	3	22	Ø18x8
DN125	366	250	210	304	188	3	22	Ø18x8
DN150	420	285	240	347	212	3	24	Ø23x8
DN200	510	340	295	411	268	3	26	Ø23x12
DN250	573	405	355	484	320	3	29	Ø27x12
DN300	660	460	410	555	378	4	32	Ø27x12

All the dimensions in the table are given in "mm". Other flange types made according to different standarts (ANSI, BS, UNI) are also available.

DN	Bellow					DLTKF-25				DLTKF-50			
	Ødi	Ødo	S	Axial Spring Rate N/mm	Effective Bellow Area cm²	EXPANSION Axial mm	EXPANSION Lateral mm	L	Code	EXPANSION Axial mm	EXPANSION Lateral mm	L	Code
DN25	38	48,2	2,6	20,15	14,58	±15	±25	250	702.070.201.002	±15	±50	350	702.070.202.002
DN32	42,2	55	2,6	13,34	18,62	±15	±25	250	702.070.201.004	±15	±50	350	702.070.202.004
DN40	48,3	61	2,6	15,79	23,44	±15	±25	250	702.070.201.006	±15	±50	350	702.070.202.006
DN50	60,3	76	2,9	21,25	36,46	±15	±25	350	702.070.201.008	±15	±50	450	702.070.202.008
DN65	76,1	95	2,9	17,33	57,45	±30	±25	350	702.070.201.010	±30	±50	450	702.070.202.010
DN80	88,9	111	3,2	18,2	78,42	±30	±25	400	702.070.201.012	±30	±50	500	702.070.202.012
DN100	114,3	140	3,6	21,49	137,09	±30	±25	400	702.070.201.014	±30	±50	500	702.070.202.014
DN125	139,7	164	4	27,86	181,01	±30	±25	450	702.070.201.016	±30	±50	650	702.070.202.016
DN150	168,3	200	4,5	28,34	266,20	±30	±25	450	702.070.201.018	±30	±50	650	702.070.202.018
DN200	219,1	250	6,3	79,1	431,86	±30	±25	500	702.070.201.020	±30	±50	700	702.070.202.020
DN250	273	323	6,3	37,49	697,11	±30	±25	600	702.070.201.022	±30	±50	800	702.070.202.022
DN300	323,9	380	7,1	59,61	972,37	±30	±25	750	702.070.201.024	±30	±50	950	702.070.202.024

All the dimensions in the table are given in "mm".

Universal Tied Expansion Joints, Flanged

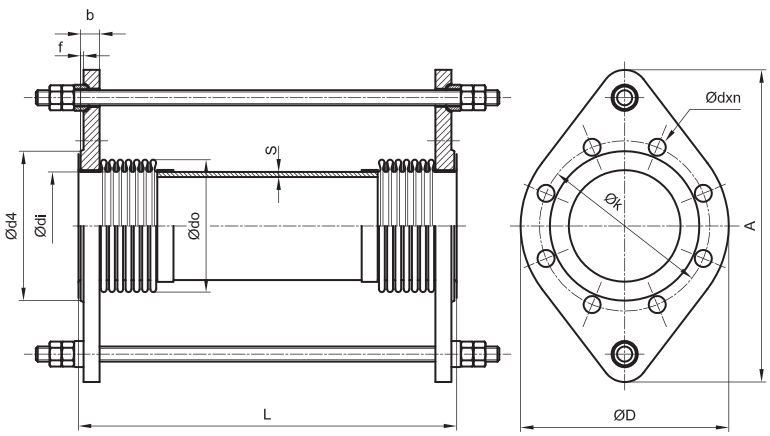

Flange (DIN EN 1092/1) PN 16								
DN	A	ØD	Øk1	k2	Ød4	f	b	Ødxn
DN25	185	115	85	150	68	2	16	Ø14x4
DN32	210	140	100	180	78	2	18	Ø18x4
DN40	220	150	110	185	88	3	18	Ø18x4
DN50	250	165	125	205	102	3	20	Ø18x4
DN65	270	185	145	225	122	3	20	Ø18x4
DN80	310	200	160	251	138	3	20	Ø18x8
DN100	330	220	180	271	158	3	22	Ø18x8
DN125	366	250	210	304	188	3	22	Ø18x8
DN150	420	285	240	347	212	3	24	Ø23x8
DN200	510	340	295	411	268	3	26	Ø23x12
DN250	573	405	355	484	320	3	29	Ø27x12
DN300	660	460	410	555	378	4	32	Ø27x12

All the dimensions in the table are given in "mm". Other flange types made according to different standarts (ANSI, BS, UNI) are also available

DN	Bellow					DLTKF-75				DLTKF-100			
	Ødi	Ødo	S	Axial Spring Rate N/mm	Effective Bellow Area cm²	Expansion Axial mm	Expansion Lateral mm	L	Code	Expansion Axial mm	Expansion Lateral mm	L	Code
DN25	38	48,2	2,6	20,15	14,58	±15	±75	450	702.070.203.002	±15	±100	550	702.070.204.002
DN32	42,2	55	2,6	13,34	18,62	±15	±75	450	702.070.203.004	±15	±100	550	702.070.204.004
DN40	48,3	61	2,6	15,79	23,44	±15	±75	450	702.070.203.006	±15	±100	550	702.070.204.006
DN50	60,3	76	2,9	21,25	36,46	±15	±75	550	702.070.203.008	±15	±100	650	702.070.204.008
DN65	76,1	95	2,9	17,33	57,45	±30	±75	550	702.070.203.010	±30	±100	650	702.070.204.010
DN80	88,9	111	3,2	18,2	78,42	±30	±75	600	702.070.203.012	±30	±100	700	702.070.204.012
DN100	114,3	140	3,6	21,49	137,09	±30	±75	600	702.070.203.014	±30	±100	700	702.070.204.014
DN125	139,7	164	4	27,86	181,01	±30	±75	750	702.070.203.016	±30	±100	850	702.070.204.016
DN150	168,3	200	4,5	28,34	266,20	±30	±75	750	702.070.203.018	±30	±100	850	702.070.204.018
DN200	219,1	250	6,3	79,1	431,86	±30	±75	700	702.070.203.020	±30	±100	900	702.070.204.020
DN250	273	323	6,3	37,49	697,11	±30	±75	800	702.070.203.022	±30	±100	1000	702.070.204.022
DN300	323,9	380	7,1	59,61	972,37	±30	±75	1050	702.070.203.024	±30	±100	1150	702.070.204.024

All the dimensions in the table are given in "mm"

Universal Tied Expansion Joints, Welded End

Available Types (Standard Versions)

Name	Axial Expansion Amount	Lateral Expansion Amount	Design Pressure	Definition
DLTKKB-25	±15/30mm	±25mm	16 bar	Universal Tied Expansion Joint with 25mm lateral expansion, welded end
DLTKKB-50	±15/30mm	±50mm	16 bar	Universal Tied Expansion Joint with 50mm lateral expansion,welded end
DLTKKB-75	±15/30mm	±75mm	16 bar	Universal Tied Expansion Joint with 75mm lateral expansion,welded end
DLTKKB-100	±15/30mm	±100mm	16 bar	Universal Tied Expansion Joint with 100mm lateral expansion,welded end

* Special designed Universal Tied Expansion Joints with customized features are available on request.
** Subject to technical alterations and deviations resulting from the manufacturing process without giving any notification.

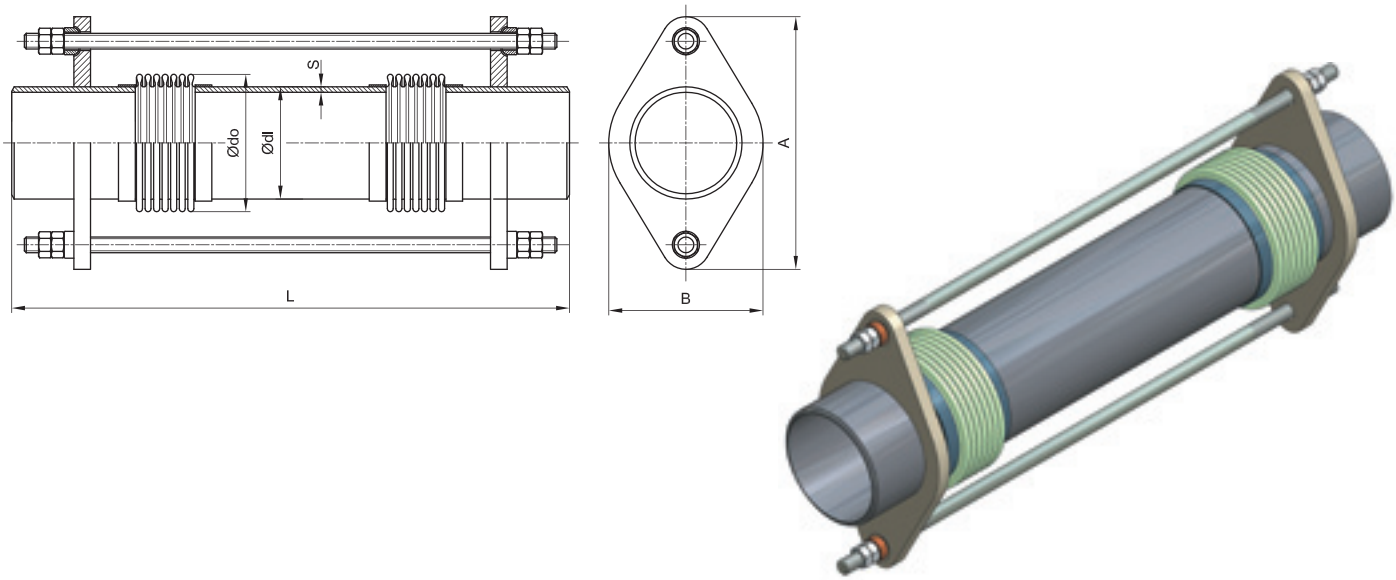

DN	S	A	B	Bellow				DLTKKB-25				DLTKKB-50			
				Ødi	Ødo	Axial Spring Rate N/mm	Effective Bellow Area cm²	Expansion		L	Code	Expansion		L	Code
								Axial mm	Lateral mm			Axial mm	Lateral mm		
DN25	2,6	135	54	38	48,2	20,15	14,58	±15	±25	540	702.070.101.002	±15	±50	640	702.070.102.002
DN32	2,6	140	64	42,2	55	13,34	18,62	±15	±25	540	702.070.101.004	±15	±50	640	702.070.102.004
DN40	2,6	150	70	48,3	61	15,79	23,44	±15	±25	540	702.070.101.006	±15	±50	640	702.070.102.006
DN50	2,9	165	86	60,3	76	21,25	36,46	±15	±25	610	702.070.101.008	±15	±50	710	702.070.102.008
DN65	2,9	190	102	76,1	95	17,33	57,45	±30	±25	610	702.070.101.010	±30	±50	710	702.070.102.010
DN80	3,2	221	115	88,9	111	18,2	78,42	±30	±25	660	702.070.101.012	±30	±50	760	702.070.102.012
DN100	3,6	249	146	114,3	140	21,49	137,09	±30	±25	660	702.070.101.014	±30	±50	760	702.070.102.014
DN125	4	292	172	139,7	164	27,86	181,01	±30	±25	700	702.070.101.016	±30	±50	900	702.070.102.016
DN150	4,5	342	200	168,3	200	28,34	266,20	±30	±25	700	702.070.101.018	±30	±50	900	702.070.102.018
DN200	6,3	413	260	219,1	250	79,1	431,86	±30	±25	750	702.070.101.020	±30	±50	950	702.070.102.020
DN250	6,3	488	315	273	323	37,49	697,11	±30	±25	850	702.070.101.022	±30	±50	1050	702.070.102.022
DN300	7,1	580	368	323,9	380	59,61	972,37	±30	±25	1000	702.070.101.024	±30	±50	1200	702.070.102.024

All the dimensions in the table are given in “mm“.

Universal Tied Expansion Joints, Welded End

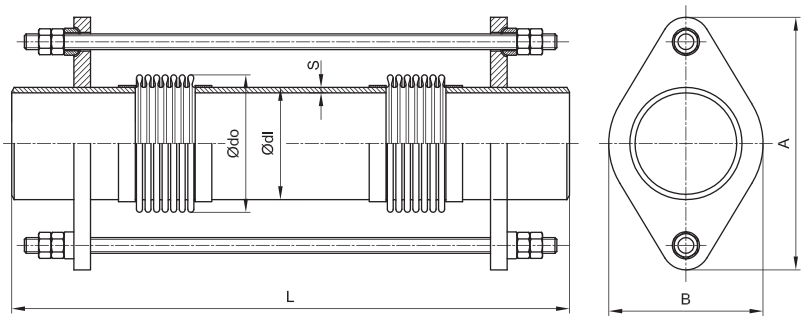

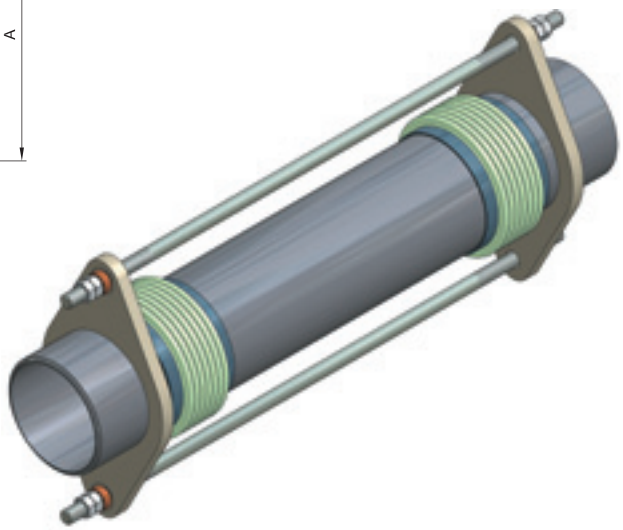

DN	S	A	B	Bellow				DLTKF-75				DLTKF-100			
				Ødi	Ødo	Axial Spring Rate N/mm	Effective Bellow Area cm²	Expansion Axial mm	Expansion Lateral mm	L	Code	Expansion Axial mm	Expansion Lateral mm	L	Code
DN25	2,6	135	54	38	48,2	20,15	14,58	±15	±75	740	702.070.103.002	±15	±100	840	702.070.104.002
DN32	2,6	140	64	42,2	55	13,34	18,62	±15	±75	740	702.070.103.004	±15	±100	840	702.070.104.004
DN40	2,6	150	70	48,3	61	15,79	23,44	±15	±75	740	702.070.103.006	±15	±100	840	702.070.104.006
DN50	2,9	165	86	60,3	76	21,25	36,46	±15	±75	810	702.070.103.008	±15	±100	910	702.070.104.008
DN65	2,9	190	102	76,1	95	17,33	57,45	±30	±75	810	702.070.103.010	±30	±100	910	702.070.104.010
DN80	3,2	221	115	88,9	111	18,2	78,42	±30	±75	860	702.070.103.012	±30	±100	960	702.070.104.012
DN100	3,6	249	146	114,3	140	21,49	137,09	±30	±75	860	702.070.103.014	±30	±100	960	702.070.104.014
DN125	4	292	172	139,7	164	27,86	181,01	±30	±75	1000	702.070.103.016	±30	±100	1100	702.070.104.016
DN150	4,5	342	200	168,3	200	28,34	266,20	±30	±75	1000	702.070.103.018	±30	±100	1100	702.070.104.018
DN200	6,3	413	260	219,1	250	79,1	431,86	±30	±75	1050	702.070.103.020	±30	±100	1150	702.070.104.020
DN250	6,3	488	315	273	323	37,49	697,11	±30	±75	1150	702.070.103.022	±30	±100	1250	702.070.104.022
DN300	7,1	580	368	323,9	380	59,61	972,37	±30	±75	1300	702.070.103.024	±30	±100	1400	702.070.104.024

All the dimensions in the table are given in “mm“.

Application of Fixed Points

By using Universal Tied Expansion Joints in pipeline applications, it will be possible to build up well structured and freely moving straight pipelines. Lateral expansion absorption can only be possible with applying appropriate guides which are strong enough to meet the pressure at both ends.

DOUBLE GIMBAL EXPANSION JOINTS

FM APPROVED

Scan this QR Code

PN 64 | ANSI | DIN EN | MAX. +600°C

Gimbal type expansion joints are designed to permit angular rotation in any plane by the use of two pairs of hinges affixed to a common floating gimbal ring.

Simply, a double gimbal expansion joint is consisted of two single gimbal expansion joints and an intermediate pipe connects them each other. The advantage of this arrangement is the ability to absorb a large lateral movement in any plane at each end. Because the gimbals are attached to each end of the bellows, the thermal expansion of the intermediate pipe will not be absorbed by the universal but must be accepted by the adjacent piping.

Movement Absorption

This type of expansion joints are used to absorb axial and lateral movements in all planes.
The amount of lateral deflection depends on the convolution number of the bellows on each side of the expansion joint. This amount can also be increased by changing the length of the intermediate pipe.Hinges and gimbals provide proper positioning and prevent installation inaccuracies.

Advantages of Double Gimbal Expansion Joints

• Protects the pipeline systems against collapse and breakages by compensating seismic motions (earthquake) and large lateral and angular movements.
• Movement of bellows is more controlled.
• Internal flow liners for eliminating velocity problems may be fitted.
• Anchors only require to absorb spring forces.
• Pressure thrust is restrained by the hardware

DESIGN

Structure

Bellow Material	Stainless Steel AISI 321 (opt.304,316L,316TI,309)
Connection Types	Fixed and Floating Flanged and Welded End
Flange Material	Carbon Steel St.37.2 as standard, the material can be customised on request
Intermediate Pipe Material	Carbon Steel St.37.2 as standard, the material can be customised on request
Hinge and Gimbal Material	Carbon Steel St.37.2 as standard, the material can be customised on request

Operation Conditions

Operating Temperature	-80°C/+600°C
Operating Pressure	PN 2,5/6/16/25/40/64
Nominal Diameters	DN25 (1") - DN1000 (40")

Double Gimbal Expansion Joints, Flanged

Available Types (Standard Versions)

Name	Axial Expansion Amount	Lateral Expansion Amount	Design Pressure	Definition
SISKKF-50	±50mm	±50mm	16 bar	Double Gimbal Expansion Joint with 50mm lateral expansion,flanged
SISKKF-100	±50mm	±100mm	16 bar	Double Gimbal Expansion Joint with 100mm lateral expansion,flanged
SISKKF-150	±50mm	±150mm	16 bar	Double Gimbal Expansion Joint with 150mm lateral expansion,flanged
SISKKF-200	±50mm	±200mm	16 bar	Double Gimbal Expansion Joint with 200mm lateral expansion,flanged

* Special designed Double Gimbal Expansion Joints with customized features are available on request.
** Subject to technical alterations and deviations resulting from the manufacturing process without giving any notification.

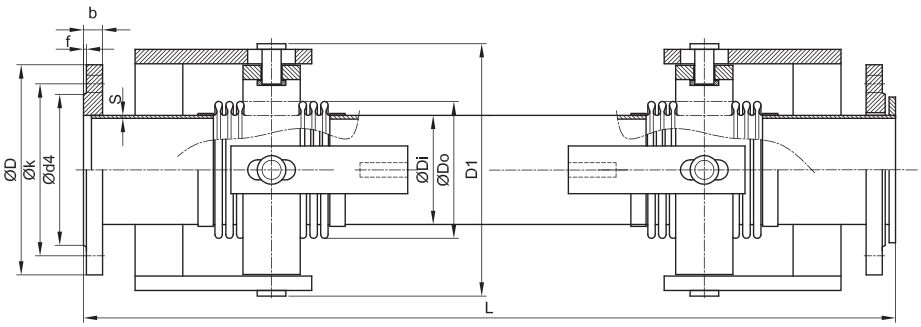

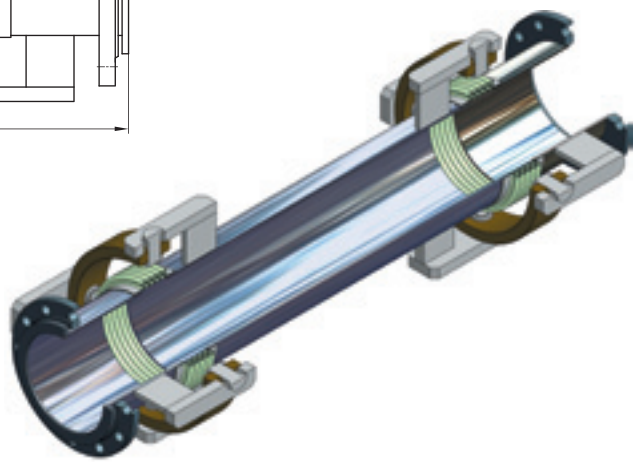

Flange (DIN EN 1092/1) PN 16								
DN	A	ØD	Øk1	k2	Ød4	f	b	Ødxn
DN25	185	115	85	150	68	2	16	Ø14x4
DN32	210	140	100	180	78	2	18	Ø18x4
DN40	220	150	110	185	88	3	18	Ø18x4
DN50	250	165	125	205	102	3	20	Ø18x4
DN65	270	185	145	225	122	3	20	Ø18x4
DN80	310	200	160	251	138	3	20	Ø18x8
DN100	330	220	180	271	158	3	22	Ø18x8
DN125	366	250	210	304	188	3	22	Ø18x8
DN150	420	285	240	347	212	3	24	Ø23x8
DN200	510	340	295	411	268	3	26	Ø23x12
DN250	573	405	355	484	320	3	29	Ø27x12
DN300	660	460	410	555	378	4	32	Ø27x12

All the dimensions in the table are given in “mm“.
Other flange types made according to different standarts (ANSI, BS, UNI) are also available

DOUBLE GIMBAL EXPANSION JOINTS

Double Gimbal Expansion Joints, Flanged

DN	Bellow			D1	s	SISKKF-50					SISKKF-100				
	ØDi	ØD0	Effective Bellow Area cm²			Expansion			L	Code	Expansion			L	Code
						± X	±Z	± Y			± X	±Z	± Y		
DN25	38	48,2	14,58	90	2,3	50	50	50	720	702.070.301.002	50	50	100	920	702.070.302.002
DN32	42,2	55	18,62	105	2,6	50	50	50	720	702.070.301.004	50	50	100	920	702.070.302.004
DN40	48,3	61	23,44	115	2,6	50	50	50	720	702.070.301.006	50	50	100	920	702.070.302.006
DN50	60,3	76	36,46	140	2,9	50	50	50	800	702.070.301.008	50	50	100	1000	702.070.302.008
DN65	76,1	95	57,45	160	2,9	50	50	50	800	702.070.301.010	50	50	100	1000	702.070.302.010
DN80	88,9	111	78,42	190	3,2	50	50	50	830	702.070.301.012	50	50	100	1030	702.070.302.012
DN100	114,3	140	137,09	250	3,6	50	50	50	850	702.070.301.014	50	50	100	1050	702.070.302.014
DN125	139,7	164	181,01	285	4	50	50	50	980	702.070.301.016	50	50	100	1180	702.070.302.016
DN150	168,3	200	266,20	350	4,5	50	50	50	980	702.070.301.018	50	50	100	1180	702.070.302.018
DN200	219,1	250	431,86	420	6,3	50	50	50	1140	702.070.301.020	50	50	100	1340	702.070.302.020
DN250	273	323	697,11	480	6,3	50	50	50	1140	702.070.301.022	50	50	100	1340	702.070.302.022
DN300	323,9	380	972,37	540	7,1	50	50	50	1200	702.070.301.024	50	50	100	1400	702.070.302.024

DN	Bellow			D1	s	SISKKF-150					SISKKF-200				
	ØDi	ØD0	Effective Bellow Area cm²			Expansion			L	Code	Expansion			L	Code
						± X	±Z	± Y			± X	±Z	± Y		
DN25	38	48,2	14,58	90	2,3	50	50	150	1120	702.070.303.002	50	50	200	1320	702.070.304.002
DN32	42,2	55	18,62	105	2,6	50	50	150	1120	702.070.303.004	50	50	200	1320	702.070.304.004
DN40	48,3	61	23,44	115	2,6	50	50	150	1120	702.070.303.006	50	50	200	1320	702.070.304.006
DN50	60,3	76	36,46	140	2,9	50	50	150	1200	702.070.303.008	50	50	200	1420	702.070.304.008
DN65	76,1	95	57,45	160	2,9	50	50	150	1250	702.070.303.010	50	50	200	1500	702.070.304.010
DN80	88,9	111	78,42	190	3,2	50	50	150	1270	702.070.303.012	50	50	200	1500	702.070.304.012
DN100	114,3	140	137,09	250	3,6	50	50	150	1300	702.070.303.014	50	50	200	1550	702.070.304.014
DN125	139,7	164	181,01	285	4	50	50	150	1480	702.070.303.016	50	50	200	1780	702.070.304.016
DN150	168,3	200	266,20	350	4,5	50	50	150	1480	702.070.303.018	50	50	200	1780	702.070.304.018
DN200	219,1	250	431,86	420	6,3	50	50	150	1700	702.070.303.020	50	50	200	2050	702.070.304.020
DN250	273	323	697,11	480	6,3	50	50	150	1700	702.070.303.022	50	50	200	2100	702.070.304.022
DN300	323,9	380	972,37	540	7,1	50	50	150	1750	702.070.303.024	50	50	200	2150	702.070.304.024

All the dimensions in the table are given in "mm".

Double Gimbal Expansion Joints, Welded End

Available Types (Standard Versions)

Name	Axial Expansion Amount	Lateral Expansion Amount	Design Pressure	Definition
SISKB-50	±50mm	±50mm	16 bar	Double Gimbal Expansion Joint with 50mm lateral expansion,welded end
SISKB-100	±50mm	±100mm	16 bar	Double Gimbal Expansion Joint with 100mm lateral expansion,welded end
SISKB-150	±50mm	±150mm	16 bar	Double Gimbal Expansion Joint with 150mm lateral expansion,welded end
SISKB-200	±50mm	±200mm	16 bar	Double Gimbal Expansion Joint with 200mm lateral expansion,welded end

* Special designed Double Gimbal Expansion Joints with customized features are available on request.
** Subject to technical alterations and deviations resulting from the manufacturing process without giving any notification.

Double Gimbal Expansion Joints, Welded End

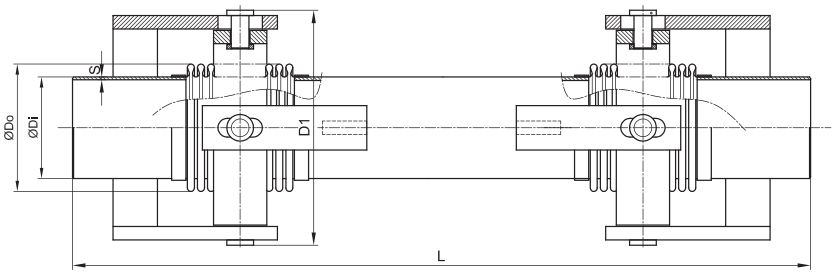

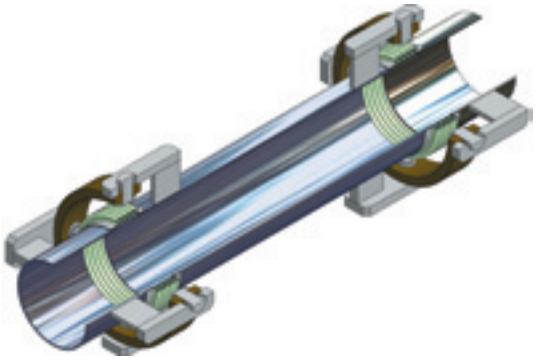

DN	Bellow			D1	s	SISKB-50					SISKB-100				
	ØDi	ØD0	Effective Bellow Area cm²			Expansion			L	Code	Expansion			L	Code
						± X	±Z	± Y			± X	±Z	± Y		
DN25	38	48,2	14,58	90	2,3	50	50	50	707	702.070.401.002	50	50	100	907	702.070.402.002
DN32	42,2	55	18,62	105	2,6	50	50	50	707	702.070.401.004	50	50	100	907	702.070.402.004
DN40	48,3	61	23,44	115	2,6	50	50	50	707	702.070.401.006	50	50	100	907	702.070.402.006
DN50	60,3	76	36,46	140	2,9	50	50	50	785	702.070.401.008	50	50	100	985	702.070.402.008
DN65	76,1	95	57,45	160	2,9	50	50	50	785	702.070.401.010	50	50	100	958	702.070.402.010
DN80	88,9	111	78,42	190	3,2	50	50	50	815	702.070.401.012	50	50	100	1015	702.070.402.012
DN100	114,3	140	137,09	250	3,6	50	50	50	835	702.070.401.014	50	50	100	1035	702.070.402.014
DN125	139,7	164	181,01	285	4	50	50	50	963	702.070.401.016	50	50	100	1163	702.070.402.016
DN150	168,3	200	266,20	350	4,5	50	50	50	963	702.070.401.018	50	50	100	1163	702.070.402.018
DN200	219,1	250	431,86	420	6,3	50	50	50	1120	702.070.401.020	50	50	100	1320	702.070.402.020
DN250	273	323	697,11	480	6,3	50	50	50	1120	702.070.401.022	50	50	100	1320	702.070.402.022
DN300	323,9	380	972,37	540	7,1	50	50	50	1177	702.070.401.024	50	50	100	1377	702.070.402.024

DN	Bellow			D1	s	SISKB-150					SISKB-200				
	ØDi	ØD0	Effective Bellow Area cm²			Expansion			L	Code	Expansion			L	Code
						± X	±Z	± Y			± X	±Z	± Y		
DN25	38	48,2	14,58	90	2,3	50	50	150	1107	702.070.403.002	50	50	200	1307	702.070.404.002
DN32	42,2	55	18,62	105	2,6	50	50	150	1107	702.070.403.004	50	50	200	1307	702.070.404.004
DN40	48,3	61	23,44	115	2,6	50	50	150	1107	702.070.403.006	50	50	200	1307	702.070.404.006
DN50	60,3	76	36,46	140	2,9	50	50	150	1185	702.070.403.008	50	50	200	1405	702.070.404.008
DN65	76,1	95	57,45	160	2,9	50	50	150	1235	702.070.403.010	50	50	200	1485	702.070.404.010
DN80	88,9	111	78,42	190	3,2	50	50	150	1255	702.070.403.012	50	50	200	1485	702.070.404.012
DN100	114,3	140	137,09	250	3,6	50	50	150	1285	702.070.403.014	50	50	200	1535	702.070.404.014
DN125	139,7	164	181,01	285	4	50	50	150	1463	702.070.403.016	50	50	200	1763	702.070.404.016
DN150	168,3	200	266,20	350	4,5	50	50	150	1463	702.070.403.018	50	50	200	1763	702.070.404.018
DN200	219,1	250	431,86	420	6,3	50	50	150	1680	702.070.403.020	50	50	200	2030	702.070.404.020
DN250	273	323	697,11	480	6,3	50	50	150	1680	702.070.403.022	50	50	200	2080	702.070.404.022
DN300	323,9	380	972,37	540	7,1	50	50	150	1727	702.070.403.024	50	50	200	2127	702.070.404.024

All the dimensions in the table are given in “mm“.

District Heating Expansion Joints

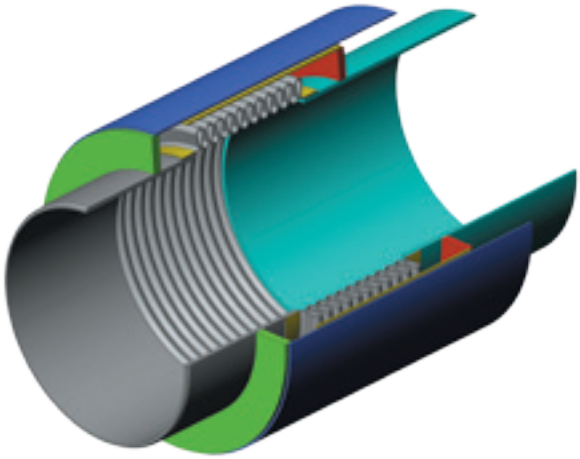

Scan this QR Code

Ayvaz's highly flexible metal bellowed expansion joints are designed to absorb large axial movements specially for installation in district heating pipe systems.

The axial forces in the pipeline are directly transferred through adjoining end surfaces of the pipes as to protect the bellows against overloading in cases that the bellows are fully compressed.

Movement Absorption

The highly flexible bellow of the compensator ensures absorption of large axial movements. The cover, optional guides and rings of the compensator contribute high stability. The cover likewise absorbs eventual misalignments in the pipeline, which can occur if the pipeline hangs a bit in the compensator. This should however be avoided.

Advantages of Ex-pressed Expansion Joints

- Absorption of large axial movements
- Pipeline protection
- Easy installation and insulation
- Protection against torsion

DESIGN

Structure

Bellow Material	Stainless Steel AISI 321 (opt.304,316L,316Tl,309)
Connection Types	Welded End
Connection Material	Carbon Steel St.37.2 as standard, the material can be customised on request
Cover Material	Carbon Steel St.37.2 as standard, the material can be customised on request

Operation Conditions

Operating Temperature	-80°C/+600°C
Operating Pressure	PN 16
Nominal Diameters	DN 50 (2") - DN1000 (40")

District Heating Expansion Joints

Name	Expansion Amount	Design Pressure	Definition
DSTKKB-1	±30-105	16 bar	Single bellowed district heating expansion joint with welded ends
DSTKKB-2	±60-210	16 bar	Double bellowed district heating expansion joint with welded ends

* Special designed, Double Plied Vibration Absorbers with customized features are available on request.
** Subject to technical alterations and deviations resulting from the manufacturing process without giving any notification.

Single Bellowed District Heating Expansion Joint With Welded Ends

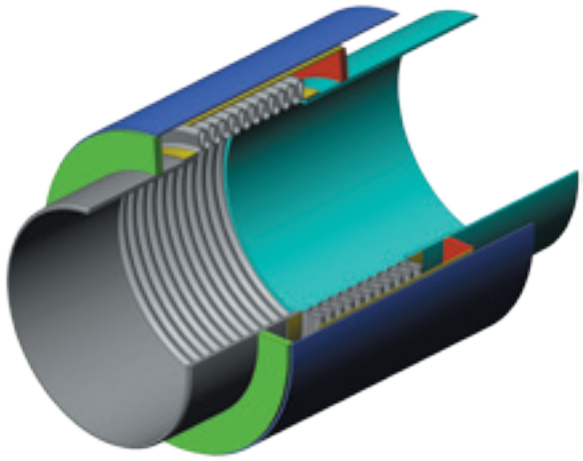

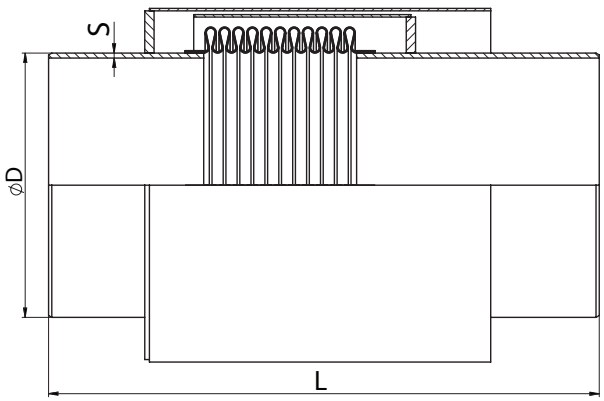

DN	ØD	s	L	Axial Movement (+/- mm)	Axial Spring Rate N/mm	Effective Bellow Area cm2	Life Cycle (100%)	Life Cycle (50%)	Life Cycle (33%)	Code
DN50	57	3,5	540	+/- 30	223,8	32,78	83	1130	5929	702.151.060.014
DN65	76	3,5	550	+/- 30	266,8	55,44	104	1388	7094	702.151.060.016
DN80	89	3,5	570	+/- 35	333,4	78,57	99	1406	7753	702.151.070.018
DN100	108	4	620	+/- 50	376,2	114,47	73	1029	5265	702.151.100.020
DN125	133	4	630	+/- 50	363,7	169,79	101	1351	6945	702.151.100.022
DN150	159	4,5	640	+/- 50	412,1	237,88	138	1885	9863	702.151.100.024
DN200	219	6	750	+/- 70	643,1	434,28	71	1003	5168	702.151.140.026
DN250	273	7	780	+/- 80	618,2	694,00	141	1912	9978	702.151.160.028
DN300	325	7	790	+/- 90	695,6	952,63	105	1409	7208	702.151.180.030
DN350	377	8	800	+/- 90	694,6	1285,59	171	2314	11986	702.151.180.032
DN400	426	8	840	+/- 100	681,3	1633,78	124	1592	7745	702.151.200.034
DN500	530	8	830	+/- 100	732,5	2464,00	161	2097	10414	702.151.200.038
DN600	630	8	890	+/- 100	851	3422,57	152	1968	9716	702.151.200.042
DN700	720	8	1010	+/- 105	975,5	4419,64	126	1618	7906	702.151.210.046
DN800	820	8	1050	+/- 105	1081,4	5676,79	117	1497	7266	702.151.210.050
DN900	920	10	1050	+/- 105	1215,7	7091,07	117	1487	7221	702.151.210.054
DN1000	1020	10	1080	+/- 105	1350	8662,50	116	1480	7185	702.151.210.058

All the dimensions in the table are given in “mm“.

Double Bellowed District Heating Expansion Joint With Welded Ends

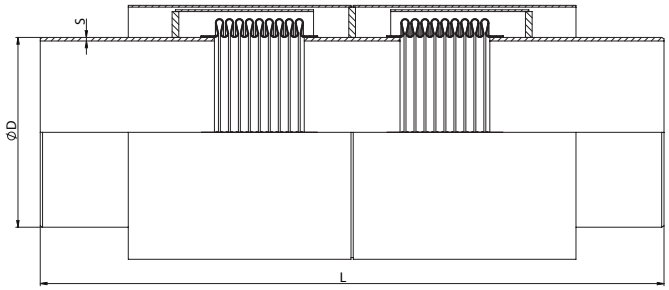

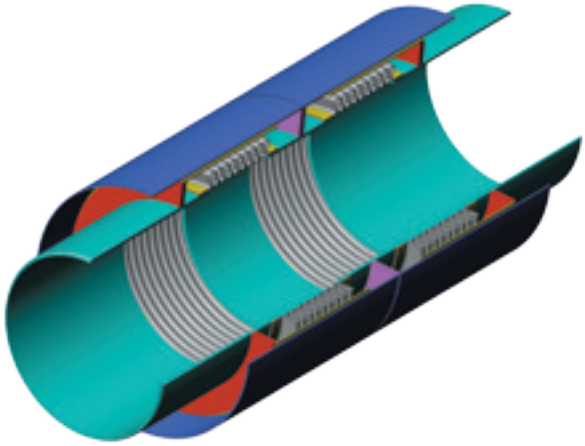

DN	ØD	s	L	Axial Movement (+/- mm)	Axial Spring Rate N/mm	Effective Bellow Area cm2	Life Cycle (100%)	Life Cycle (50%)	Life Cycle (33%)	Code
DN50	57	3,5	870	+/- 60	133,4	32,78	83	1130	5929	702.152.060.014
DN65	76	3,5	880	+/- 60	111,9	55,44	104	1388	7094	702.152.060.016
DN80	89	3,5	920	+/- 70	166,7	78,57	99	1406	7753	702.152.070.018
DN100	108	4	1030	+/- 100	188,1	114,47	73	1029	5265	702.152.100.020
DN125	133	4	1050	+/- 100	181,85	169,79	101	1351	6945	702.152.100.022
DN150	159	4,5	1070	+/- 100	206,05	237,88	138	1885	9863	702.152.100.024
DN200	219	6	1280	+/- 140	321,55	434,28	71	1003	5168	702.152.140.026
DN250	273	7	1340	+/- 160	309,1	694,00	141	1912	9978	702.152.160.028
DN300	325	7	1370	+/- 180	347,8	952,63	105	1409	7208	702.152.180.030
DN350	377	8	1390	+/- 180	347,3	1285,59	171	2314	11986	702.152.180.032
DN400	426	8	1460	+/- 200	340,65	1633,78	124	1592	7745	702.152.200.034
DN500	530	8	1450	+/- 200	366,25	2464,00	161	2097	10414	702.152.200.038
DN600	630	8	1570	+/- 200	425,5	3422,57	152	1968	9716	702.152.200.042
DN700	720	8	1800	+/- 210	487,75	4419,64	126	1618	7906	702.152.210.046
DN800	820	8	1880	+/- 210	540,7	5676,79	117	1497	7266	702.152.210.050
DN900	920	10	1870	+/- 210	607,85	7091,07	117	1487	7221	702.152.210.054
DN1000	1020	10	1930	+/- 210	675	8662,50	116	1480	7185	702.152.210.058

All the dimensions in the table are given in “mm“.

Double Plied Expansion Joints with Tie Rods

Scan this QR Code

Besides of compensating thermal expansions, the most important function of expansion joints is to solve the problems caused by the system vibration. Expansion joints are very effective especially on compensating the vibrations with high frequency and low oscillation.

Movement Absorption

Pump Connections
Expansion joints are used at the connections of the pump to the pipelines around the pump's inlet and outlet. The fixed points right after the expansion joints are used to prevent the vibration through pipeline which is caused by the pump. Use of expansion joints for vibration absorbing is also useful to prevent the noise caused by the vibration.

Compressor Connections
In most cases, although the insulation applications, compressor movements cause vibration in the connected pipelines. Using expansion joint after the compressor absorbs the vibration caused by the compressor and provides ideal operation conditions for the system.

Advantages of Double Double Plied Vibration Absorbers

- They prevent damage to pumps result of the piping stress.
- They absorb vibration and noise in pump connections.
- They are installed easily and prevent the possible pump failures.
- They have a compact design that reduces the waste of space.
- The bellows and the braiding are manufactured with stainless steel material
- To provide required piping flexibility to the systems in order to maintain proper operating conditions.
- To protect equipment from stress due to misalignment.

DESIGN

Structure

Bellow Material	Stainless Steel AISI 321 (opt.304,316L,316TI,309) Double Plied
Connection Types	Fixed Flanged
Flange Material	Carbon Steel St.37.2 as standard, the material can be customised on request
Tie Rod Material	Carbon Steel St.37.2 as standard, the material can be customised on request
Carbon Steel	St.37.2 as standard, the material can be customised on request

Operation Conditions

Operating Temperature	-80°C/+600°C
Operating Pressure	PN 2,5/6/16/25/40/64
Nominal Diameters	DN25 (1") - DN1000 (40")

Double Plied Expansion Joints with tie rods

Available Types (Standard Versions)

Name	Axial Expansion Amount	Design Pressure	Definition
MKTY-30	-20/+10	16 bar	Double Plied Vibration Absorber with 30mm axial expansion, flanged

* Special designed, Double Plied Vibration Absorbers with customized features are available on request.
** Subject to technical alterations and deviations resulting from the manufacturing process without giving any notification.

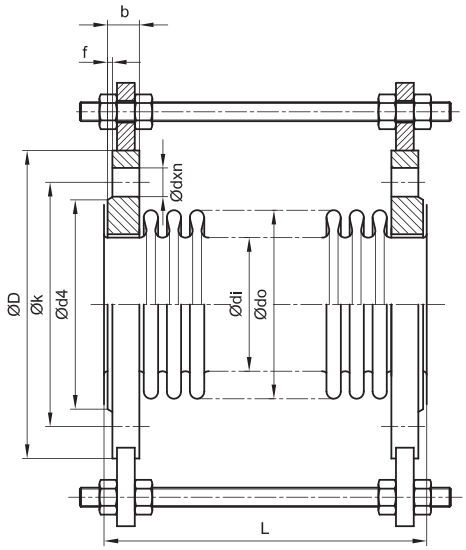

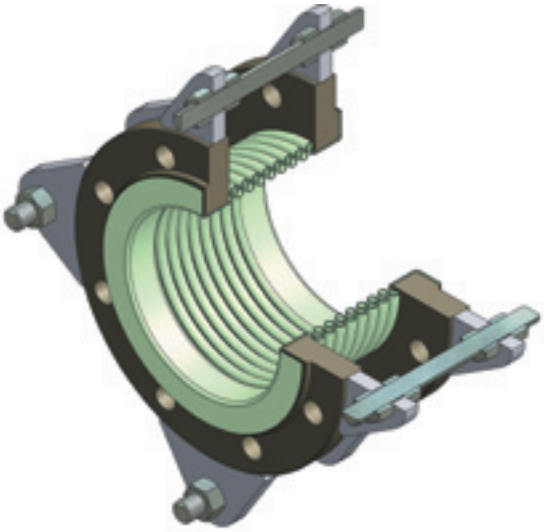

DN	Flange (DIN EN 1092/1) PN 16						Bellow			L	Code
	ØD	Øk	Ød4	f	b	Ødxn	Ødi	Ødo	Effective Bellow Area cm²		
DN25	115	85	68	2	16	Ø 14x4	38	48,2	14,58	110	702.031.103.102
DN32	140	100	78	2	18	Ø 18x4	42,4	55	18,62	115	702.031.103.104
DN40	150	110	88	3	18	Ø 18x4	48,3	61	23,44	120	702.031.103.106
DN50	165	125	102	3	20	Ø 18x4	60,3	76	36,46	110	702.031.103.108
DN65	185	145	122	3	20	Ø 18x4	76,1	95	57,45	110	702.031.103.110
DN80	200	160	138	3	20	Ø 18x8	88,9	111	78,42	110	702.031.103.112
DN100	220	180	158	3	22	Ø 18x8	114,3	150	137,09	115	702.031.103.114
DN125	250	210	188	3	22	Ø 18x8	139,7	164	181,01	120	702.031.103.116
DN150	285	240	212	3	24	Ø 23x8	168,3	200	266,20	145	702.031.103.118
DN200	340	295	268	3	26	Ø 23x12	219,1	250	431,86	140	702.031.103.120
DN250	405	355	320	3	29	Ø 27x12	273	323	697,11	150	702.031.103.122
DN300	460	410	378	4	32	Ø 27x12	323,9	380	972,37	150	702.031.103.124

All the dimensions in the table are given in “mm“.
Other flange types made according to different standarts (ANSI, BS, UNI) are also available

Application of Fixed Points

By using appropriate expansion joints in pipeline applications, it will be possible to build up well structured and freely moving straight pipelines. Proper expansion absorption can only be possible with applying suitable guides which are strong enough to meet the pressure at both ends.

Braided Expansion Joints

Scan this QR Code

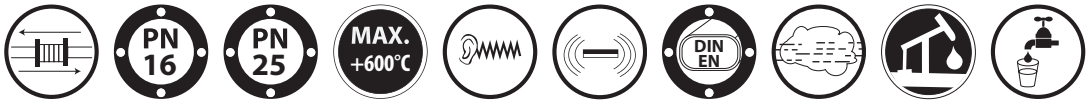

Ayvaz's braided expansion joints are assembled using annularly corrugated stainless steel bellows and high strength stainless steel braiding. They are designed for optimum performance in vibration applications and to reduce vibration in mechanical piping systems.

Movement Absorption

Braided expansion joints are constructed with a corrugated inner bellows and braided cover that helps increasing the pressure resistance rating and provides end limitations that annihilate the need for additional control assemblies.

Advantages of Using Braided Expansion Joints:

- They prevent damage to pumps result of the piping stress.
- They absorb vibration and noise in pump connections.
- They are installed easily and prevent the possible pump failures.
- They have a compact design that reduces the waste of space.
- The bellows and the braiding are manufactured with stainless steel material
- To provide required piping flexibility to the systems in order to maintain proper operating conditions.
- To protect equipment from stress due to misalignment.

DESIGN

Structure

Bellow Material	Stainless Steel AISI 321 (opt.304,316L,316Tl,309)
Braiding Material	Stainless Steel AISI 304
Connection Types	Fixed and Floating Flanged and Welded End
Flange Material	Carbon Steel St.37.2 as standard, the material can be customised on request

Operation Conditions

Operating Temperature	-80°C/+600°C
Operating Pressure	PN 16/25
Nominal Diameters	DN25 (1") - DN250 (10")

Braided Expansion Joints

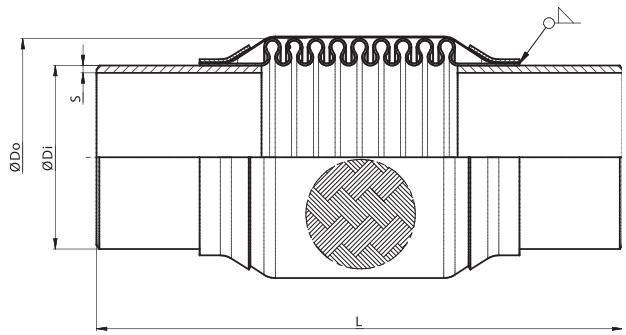

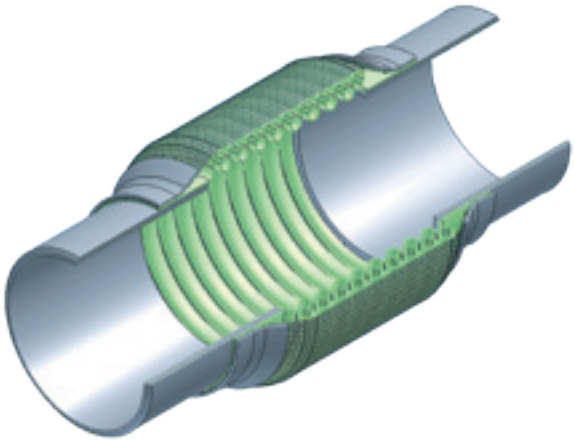

DN	Bellow			S	L	Code
	ØDi	ØD0	Effective Bellow Area cm²			
DN32	42,4	55	18,85	2,6	200	702.351.101.008
DN40	48,3	61	23,66	2,6	200	702.351.101.010
DN50	60,3	76	36,94	2,9	200	702.351.101.012
DN65	76,1	95	58,06	2,9	200	702.351.101.014
DN80	88,9	111	79,29	3,2	215	702.351.101.016
DN100	114,3	150	127,81	3,6	215	702.351.101.018
DN125	139,7	164	183,04	4	215	702.351.101.020
DN150	168,3	200	267,80	4,5	215	702.351.101.022
DN200	219,1	250	436,10	6	215	702.351.101.024
DN250	273	323	703,68	6	250	702.351.101.026

All the dimensions in the table are given in “mm“.

* Subject to technical alterations and deviations resulting from the manufacturing process without giving any notification.

OMEGA-FLEX (U-FLEX, V-FLEX)

Braided Expansion Joints

Scan this QR Code

Ayvaz U-Flex and V-Flex assemblies provide highly flexible and reliable connection features for fire protection lines, seismic security areas, dilatation points and industrial applications. These assemblies are used to absorb the movements caused by the potential break downs and depressions especially where the seismic movements may cause hazardous results.

Ayvaz U-Flex and V-Flex assemblies that are manufactured with FM certificate prevent the structural deformations such as cracks and break downs of rigid connections by the required flexibility they provide and offer easy, safe and reliable installation features for the users.

DESIGN

Ayvaz U-Flex and V-Flex assemblies are consisted of the parallel corrugated metal hose with braiding and Carbon Steel connection and direction parts likewise turns and elbows at various angles. Flexible metal hose provides high movement capacity in all directions to the assemblies and the braiding increases the pressure resistance accordingly

Structure

Bellow Material	Stainless Steel AISI 316L / AISI 321
Braiding Material	Stainless Steel AISI 304
Connection Types	Flange, Welded End, Grooved
Flange Material	Carbon Steel St. 37.2 , the material can be customized on request
Elbow and Turn Material	Carbon Steel St. 37.2 , the material can be customized on request

Operation Conditions

Operating Temperature	-80°C/+600°C
Operating Pressure	16 bar
Nominal Diameters	DN15 (1/2") - DN250 (10")

U-Flex,Braided Loop Joints

FM APPROVED

Available Types (Standard Versions)

Name	Movement Amount All Plates	Design Pressure	Definition
U-Flex	50mm-100mm	175 psi	U-type, 3D braided Loop-joint, Welded End
U-Flex	50mm-100mm	175 psi	U-type, 3D braided Loop-joint, Flanged
U-Flex	50mm-100mm	175 psi	U-type, 3D braided Loop-joint, Grooved End

* Special designed, Braided Loop Joints with customized features are available on request.
** Subject to technical alterations and deviations resulting from the manufacturing process without giving any notification.

U-type, 3D braided Loop-joint, Welded End

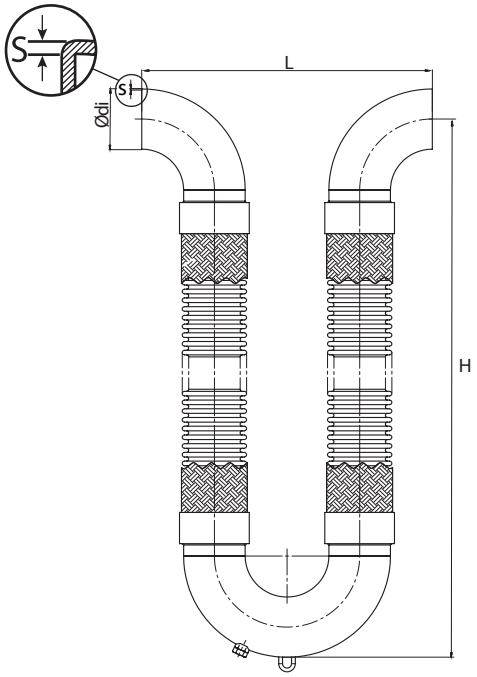

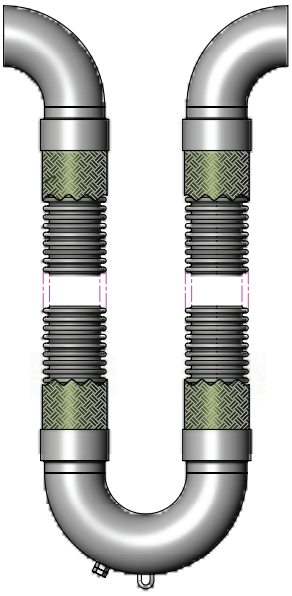

DN	Ødi	S	Movement in all directions ±mm	L	H	Code
DN15	21,3	2,6	±50	150	325	702.080.301.010
			±100	225	425	702.080.301.015
DN20	26,9	2,6	±50	131,25	325	702.080.301.020
			±100	231,25	450	702.080.301.025
DN25	33,7	2,6	±50	152	380	702.080.301.030
			±100	254	510	702.080.301.035
DN32	42,4	2,6	±50	190	410	702.080.301.040
			±100	273	535	702.080.301.045
DN40	48,3	2,6	±50	228	435	702.080.301.050
			±100	292	585	702.080.301.055
DN50	60,3	2,9	±50	304	485	702.080.301.060
			±100	356	635	702.080.301.065
DN65	76,1	2,9	±50	380	535	702.080.301.070
			±100	456	762	702.080.301.075
DN80	88,9	3,2	±50	456	585	702.080.301.080
			±100	608	890	702.080.301.085
DN100	114,3	3,6	±50	608	715	702.080.301.090
			±100	760	1020	702.080.301.095
DN125	139,7	4	±50	760	815	702.080.301.100
			±100	920	1170	702.080.301.105
DN150	168,3	4,5	±50	920	940	702.080.301.110
			±100	1220	1475	702.080.301.115
DN200	219,1	6,3	±50	1220	1220	702.080.301.120
			±100	1120	1375	702.080.301.125
DN250	273	7,1	±50	1524	1400	702.080.301.130
			±100	1524	1702	702.080.301.135

All the dimensions in the table are given in “mm”.

U-type, 3D braided Loop-joint, Flanged

FM APPROVED

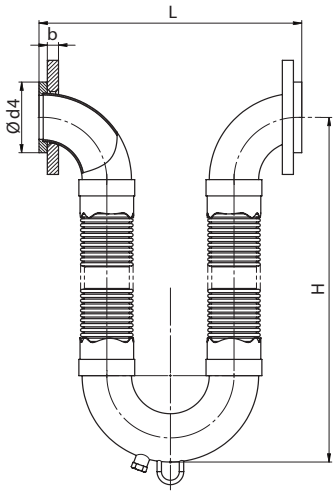

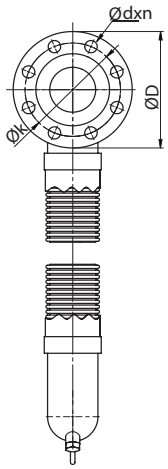

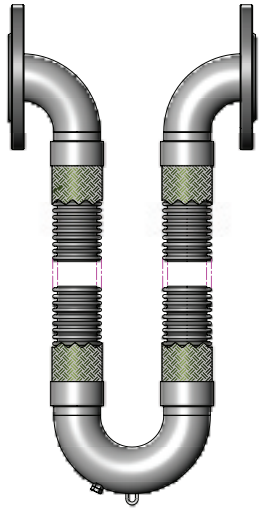

DN	Flange (DIN EN 1092/1) PN 16					Movement in all directions ±mm	L mm	H mm	Code
	ØD mm	Øk mm	b mm	Ødxn	Ød4 mm				
DN15	95	65	14	Ø14x4	45	±50	165	330	702.080.303.010
						±100	240	435	702.080.303.015
DN20	105	75	16	Ø14x4	58	±50	145	330	702.080.303.020
						±100	245	460	702.080.303.025
DN25	115	85	16	Ø14x4	68	±50	222	380	702.080.303.030
						±100	324	510	702.080.303.035
DN32	140	100	18	Ø18x4	78	±50	260	410	702.080.303.040
						±100	343	535	702.080.303.045
DN40	150	115	18	Ø18x4	88	±50	300	435	702.080.303.050
						±100	362	585	702.080.303.055
DN50	165	125	20	Ø18x4	102	±50	375	485	702.080.303.060
						±100	426	635	702.080.303.065
DN65	185	145	20	Ø18x4	122	±50	450	535	702.080.303.070
						±100	450	715	702.080.303.075
DN80	200	160	20	Ø18x8	138	±50	536	585	702.080.303.080
						±100	536	765	702.080.303.085
DN100	220	180	22	Ø18x8	158	±50	680	715	702.080.303.090
						±100	680	890	702.080.303.095
DN125	250	210	22	Ø18x8	188	±50	832	815	702.080.303.100
						±100	832	1020	702.080.303.105
DN150	285	240	24	Ø23x8	212	±50	992	940	702.080.303.110
						±100	992	1170	702.080.303.115
DN200	340	295	26	Ø23x12	268	±50	1292	1220	702.080.303.120
						±100	1292	1475	702.080.303.125
DN250	405	355	29	Ø27x12	320	±50	1600	1400	702.080.303.130
						±100	1600	1702	702.080.303.135

All the dimensions in the table are given in “mm”.
Other flange types made according to different standarts (ANSI, BS, UNI) are also available.

V-Flex,Braided Loop Joints

FM APPROVED

Available Types (Standard Versions)

Name	Movement Amount All Plates	Design Pressure	Definition
V-Flex	100mm	16 bar	U-type, 3D braided Loop-joint, Welded End
V-Flex	100mm	16 bar	U-type, 3D braided Loop-joint, Flanged
V-Flex	100mm	16 bar	U-type, 3D braided Loop-joint, Grooved End

* Special designed, Braided Loop Joints with customized features are available on request.
** Subject to technical alterations and deviations resulting from the manufacturing process without giving any notification.

V-type, 3D braided Loop-joint, Welded End

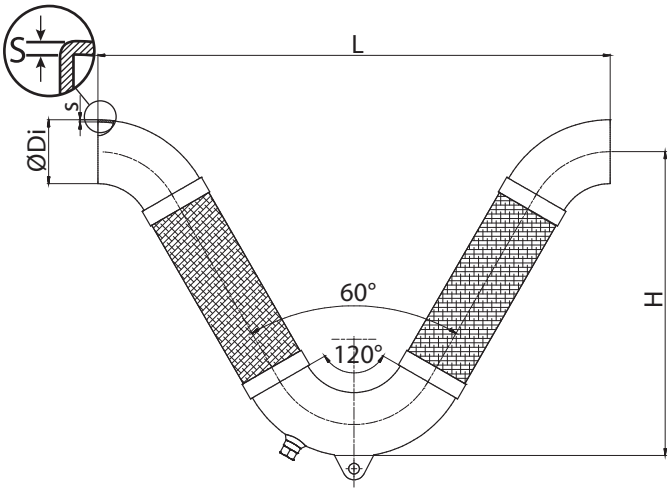

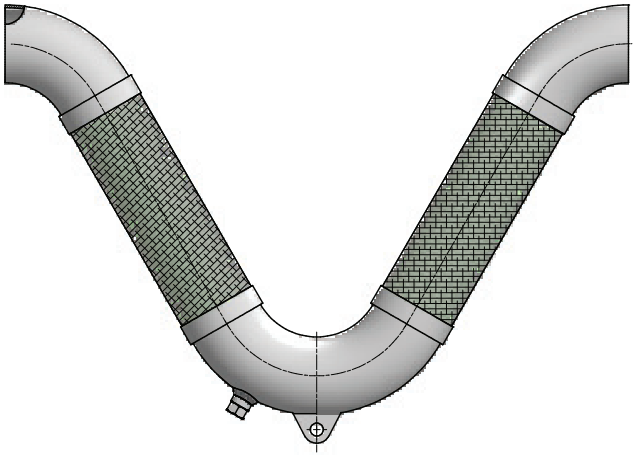

DN	ØDi	s	H	L	Movement in all directions ±mm	Code
DN15	21,3	2,6	330	505	±100	702.090.301.015
DN20	26,9	2,6	330	505	±100	702.090.301.025
DN25	33,7	2,6	505	330	±100	702.090.301.035
DN32	42,4	2,6	505	330	±100	702.090.301.045
DN40	48,3	2,6	505	330	±100	702.090.301.055
DN50	60,3	2,9	515	350	±100	702.090.301.065
DN65	76,1	2,9	620	415	±100	702.090.301.075
DN80	88,9	3,2	720	470	±100	702.090.301.085
DN100	114,3	3,6	880	545	±100	702.090.301.095
DN125	139,7	4	1070	650	±100	702.090.301.105
DN150	168,3	4,5	1255	750	±100	702.090.301.115
DN200	219,1	6,3	1520	850	±100	702.090.301.125
DN250	273	7,1	1970	1080	±100	702.090.301.135

All the dimensions in the table are given in “mm”.

V-type, 3D braided Loop-joint, Flanged

FM APPROVED

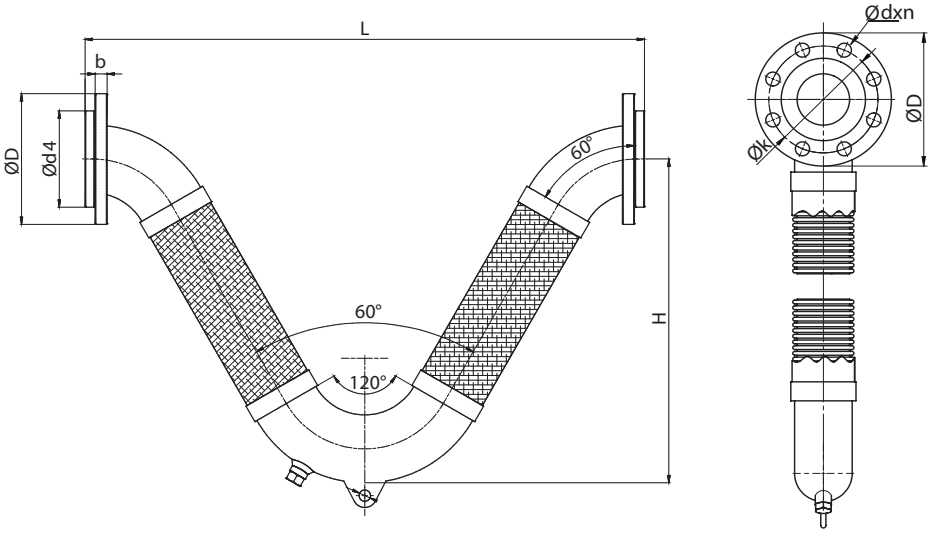

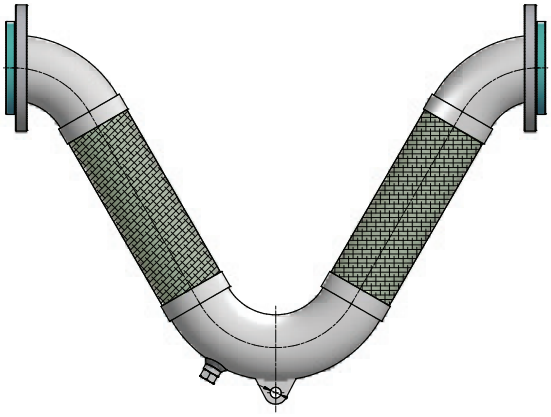

DN	Flange (DIN EN 1092/1) PN 16					H mm	L mm	Movement in all directions ±mm	Code
	ØD mm	Øk mm	b mm	Ødxn	Ød4 mm				
DN25	115	85	16	Ø14x4	68	330	530	±50	702.090.303.035
DN32	140	100	18	Ø18x4	78	330	530	±50	702.090.303.045
DN40	150	115	18	Ø18x4	88	310	530	±50	702.090.303.055
DN50	165	125	20	Ø18x4	102	350	570	±50	702.090.303.065
DN65	185	145	20	Ø18x4	122	415	675	±50	702.090.303.075
DN80	200	160	20	Ø18x8	138	470	785	±50	702.090.303.085
DN100	220	180	22	Ø18x8	158	545	945	±50	702.090.303.095
DN125	250	210	22	Ø18x8	188	650	1140	±50	702.090.303.105
DN150	285	240	24	Ø23x8	212	750	1325	±50	702.090.303.115
DN200	340	295	26	Ø23x12	268	850	1600	±50	702.090.303.125
DN250	405	355	29	Ø27x12	320	1080	2045	±50	702.090.303.135

All the dimensions in the table are given in “mm”.
Other flange types made according to different standarts (ANSI, BS, UNI) are also available.

PIPE EXPANSION JOINTS

Especially for the very high buildings, thermal expansions caused by rapid temperature changes at heating and hot water lines cause dangerous pipe movements, bends and breakages around the connection areas.

These thermal movements are also the reason of the inconvenient noises for domestic use in particularly. Ayvaz's pipe expansion joints are prefferred for both indoor and outdoor uses with their decorative designs.

Scan this QR Code

Movement Absorption

Pipe expansion joints provide axial movement absorption and maintain the pipeline security. A heating pipeline system at 90/70°C causes approximately 3 mm of movement for each floor of the buildings. For the buildings higher than 10 floors, use of the pipe expansion joints becomes compulsory in order to absorbe total expansion amount. Pipe expansion joint application must be repeated for every 10 floors.

Advantages of Pipe Expansion Joints

- They prevent damage to pipelines result of the line movements
- They absorb the possible noises and provide convenience for the users
- They are installed easily and provide time and money saving
- They have a compact and decorative design that reduces the waste of space
- They help to protect equipment from stress due to misalignment

DESIGN

Structure

Bellow Material	Stainless Steel AISI 316L / AISI 321
Body Material	Aluminium (Opt. Stainless Steel)
Connection Types	Threaded and Welded End

Operation Conditions

Operating Temperature	Max 100°C
Operating Pressure	PN 16
Nominal Diameters	DN15 (1/2") - DN100 (4")

Available Types (Standard Versions)

Name	Axial Movement Amount	Design Pressure	Definition
BKD-50	+5 / - 45 mm (Up to 2")	16 bar	Pipe Expansion Joint with 50mm axial expansion, threaded
	+15 / - 35 mm (Above 2")		
BKKB-50	+5 / - 45 mm (Up to 2")	16 bar	Pipe Expansion Joint with 50mm axial expansion, welded end
	+15 / - 35 mm (Above 2")		

* Special designed, Pipe expansion joints with customized features are available on request.
** Subject to technical alterations and deviations resulting from the manufacturing process without giving any notification.

BKD-50 Pipe Expansion Joint with 50 mm axial expansion, threaded

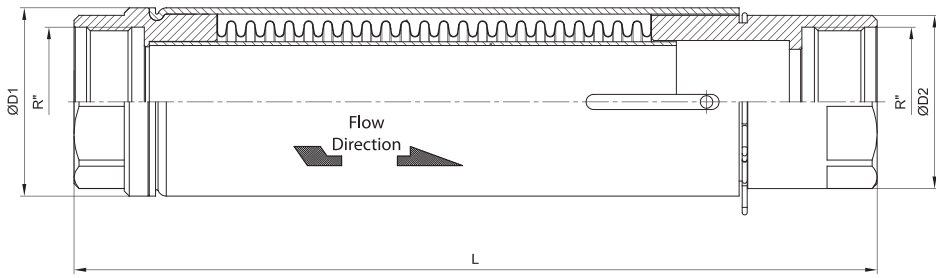

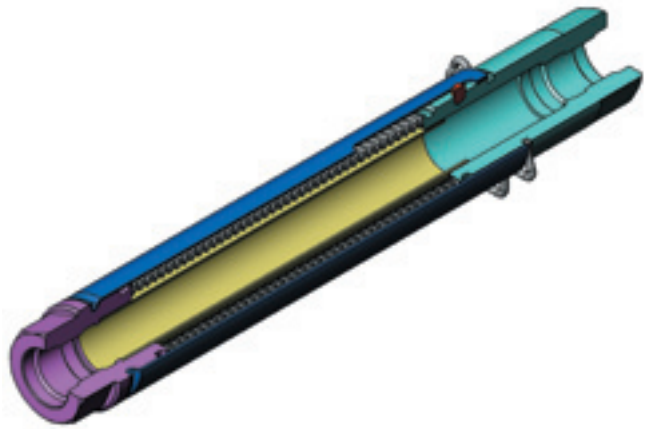

R"	ØD1	ØD2	AA	L	Code
R1/2"	38	35	32	260	702.020.010.002
R3/4"	38	35	32	260	702.020.010.004
R1"	48	44	41	285	702.020.010.006
R1 1/4"	60	54	50	320	702.020.010.008
R1 1/2"	75	69	65	320	702.020.010.010
R2"	75	69	65	320	702.020.010.012

All the dimensions in the table are given in "mm".

BKKB-50 Pipe Expansion Joint with 50mm axial expansion, welded end

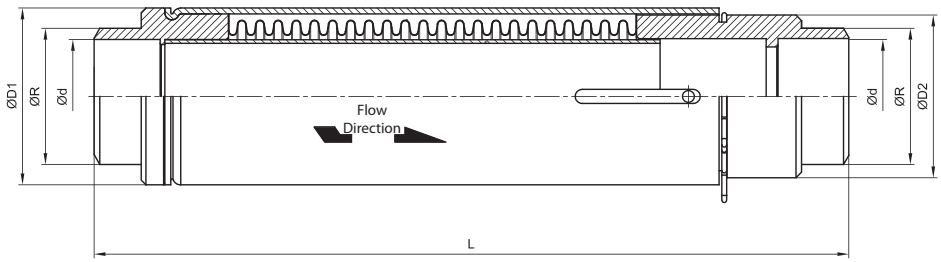

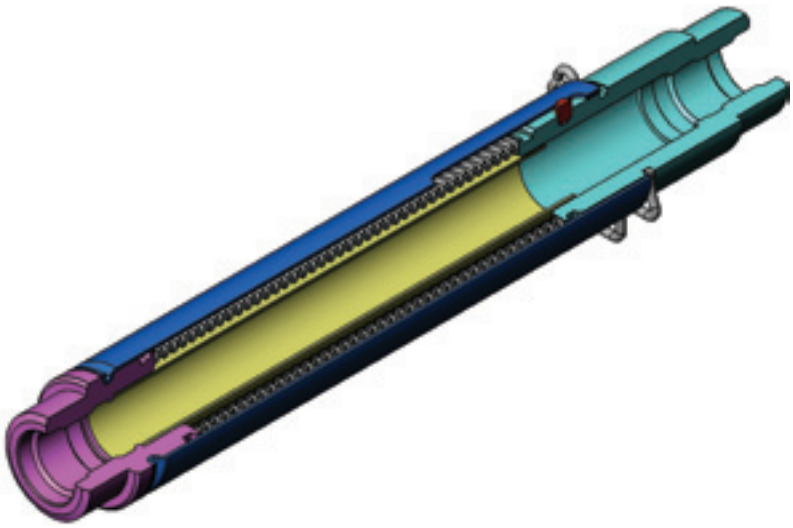

DN/ØR"		ØD1	ØD2	Ød	L	Code
DN15	Ø21,3	38	35	16,3	260	702.020.020.002
DN20	Ø26,9	38	35	20,9	260	702.020.020.004
DN25	Ø33,7	48	44	27,7	285	702.020.020.006
DN32	Ø42,2	60	54	36,4	320	702.020.020.008
DN40	Ø48,3	75	69	42,3	320	702.020.020.010
DN50	Ø60,3	75	69	54,3	320	702.020.020.012
DN65	Ø76,1	107	95	70,3	330	702.020.020.014
DN80	Ø88,9	127	111	81,5	330	702.020.020.016
DN100	Ø107,1	158	140	114,3	330	702.020.020.018
DN125	Ø164	164	139,7	131,7	330	702.020.020.020

All the dimensions in the table are given in “mm”.

RUBBER EXPANSION JOINTS

Ayvaz's Rubber Expansion joints are used in various areas such as;

- Mechanical installation and machine engineering.
- Domestic water and liquid industry.
- Shipbuilding and marine engineering.
- Power plants and nuclear stations.
- HVAC applications.

Scan this QR Code

Movement Absorption

- To compensate thermal expansion and compression.
- To reduce tension in the pipelines.
- To prevent noise and vibration to protect the connected systems.
- To compensate for ground, and settlement of especially the new buildings.
- To provide proper sealing with their elastic structures where the pipelines pass through walls.

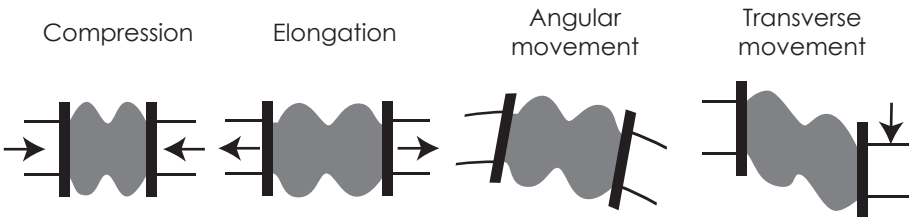

Advantages

- Ayvaz rubber expansion joints provide excellent compensating features by their highly rated rubber bellows which is consisted of special synthetic rubber, steel wire and nylon braid fibre.
- They may be produced with flange and threaded connections.
- They may have two bellowed structure in order to absorb large movements.

Ayvaz's Rubber expansion joints are designed to compensate axial, lateral, angular and transverse movements at the same time.

Rubber Expansion Joint DKK-10

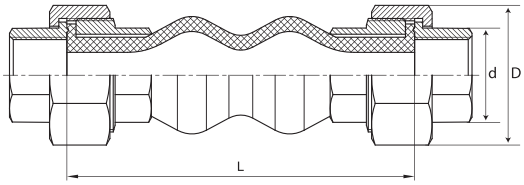

DN	Rc"	L	Axial Movement (mm)	Lateral Movement (mm)	Angular Movement (±°)	Code
DN15	1/2"	165	-22/+6	-22/+22	-30/+30	708.150.100.010
DN20	3/4"	165	-22/+6	-22/+22	-30/+30	708.150.100.020
DN25	1"	175	-22/+6	-22/+22	-30/+30	708.150.100.030
DN32	1 1/4"	186	-22/+6	-22/+22	-30/+30	708.150.100.040
DN40	11/2"	186	-22/+6	-22/+22	-30/+30	708.150.100.050
DN50	2"	186	-22/+6	-22/+22	-30/+30	708.150.100.060
DN65	21/2"	218	-22/+6	-22/+22	-30/+30	708.150.100.070
DN80	3"	260	-22/+6	-22/+22	-30/+30	708.150.100.080

*Special designed, rubber expansion joints with customized features are available on request.
** Subject to technical alterations and deviations resulting from the manufacturing process without giving any notification.

Rubber Expansion Joint LKA-10

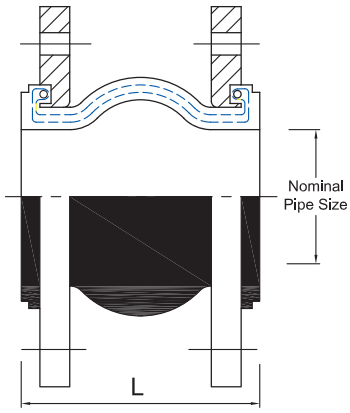

DN	L	Axial Movement (mm)	Lateral Movement (mm)	Angular Movement (±°)	Code
15	100	-10/+10	-10/+10	-10/+10	708.150.200.010
20	100	-10/+10	-10/+10	-10/+10	708.150.200.020
25	100	-10/+10	-10/+10	-10/+10	708.150.200.030
32	100	-10/+10	-10/+10	-10/+10	708.150.200.040
40	100	-10/+10	-10/+10	-10/+10	708.150.200.050
50	100	-10/+10	-10/+10	-10/+10	708.150.200.060
65	100	-10/+10	-10/+10	-10/+10	708.150.200.070
80	100	-10/+10	-12/+12	-12/+12	708.150.200.080
100	100	-10/+10	-12/+12	-12/+12	708.150.200.090
125	120	-10/+10	-12/+12	-12/+12	708.150.200.100
150	120	-10/+10	-12/+12	-12/+12	708.150.200.110
200	120	-10/+10	-12/+12	-12/+12	708.150.200.120
250	120	-10/+10	-12/+12	-12/+12	708.150.200.130
300	120	-10/+10	-12/+12	-12/+12	708.150.200.140
350	266	-25/+16	-18/+18	-15/+15	708.150.200.150
400	266	-20/+16	-18/+18	-15/+15	708.150.200.160
450	200	-20/+12	-18/+18	-15/+15	708.150.200.170
500	200	-20/+12	-18/+18	-15/+15	708.150.200.180
600	250	-20/+12	-18/+18	-15/+15	708.150.200.190

*Special designed, rubber expansion joints with customized features are available on request.
** Subject to technical alterations and deviations resulting from the manufacturing process without giving any notification.

Symbols related the lock plates and guiding applications are shown below.

Main fix point

İntermadiate fix point

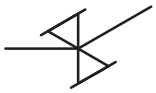
Elbow fix point

Sliding fix point

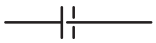
Lateral guide bearing

Guide bearing

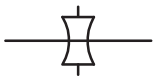
Sliding guide bearing

Anchor

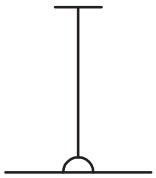
Rod hanger

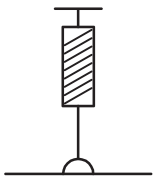
Spring hanger

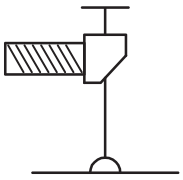
Fix spring hanger

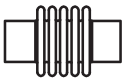
Axial expansion Joint

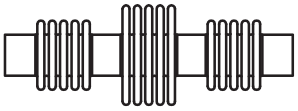
Pressure Balanced
Axial expansion joint

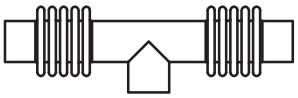
Pressure Balanced
Axial expansion joint

Single plate angular expansion joint

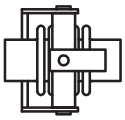
Multi plate angular expansion joint
(Gimbal type)

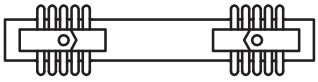
Multi plate lateral
expansion joint

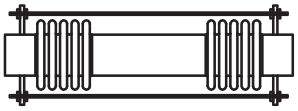
3D lateral expansion joint

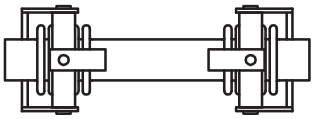
Universal expansion joint

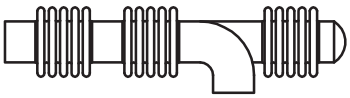
Pressure balanced
Universal expansion joint

INSTALLATION INSTRUCTIONS

Stainless steel compensators are designed for the absorbtion of previously specified movements under specific pressure and temperature conditions. So that the maximum service life is achieved, the following items must be observed during installation.

1. Pipeline:
Prior to installation of the compensator it must be ensured that.

• The route of the pipeline is straight.
• The fixed points are dimensioned so that they can absorb the reaction forces and stiffness rate that arise during use.
• The pipeline is limited by fixed points.
• Only one compensator is not subjected to torsion.

2. Pipe route:
The fixed points and route bearings must be located so that:

• The compensator is not subjected to the weight of the pipeline.
• Bending is prevented by the inclusing of fixed or loose bearings.
• Suspension in self-aligning bearings is avoided. Plain or roller bearings are to be used as the guide bearings.

3. Location of the guide bearings:
• The distance between the compensator and the 1 bearing may be a maximum of 4 times of the pipe diameter.

• The distance between the 1st and 2nd bearing may be a maximum of 14 times of the pipe diameter.

• The distance between the remaining pipe bearings may be a maximum 21 times of the pipe diameter. This distance may have to be reduced where this is required for the stability of the pipe.

4. The following items must be taken into account during installation:
• The possibily provided protective covering of the bellows may only be removed after installation.
• Possible pretensioning devices may only be removed after installation.
• On compensators fitted with an arrow, check that the direction of the arrow matches the direction of flow.
• The bellows must be protected from welding, plaster and mortar spatter.
• The installation length must agree with the installation gap.
• During installation, in order to prevent water hammer, the pressure shall be operated under control.

5. Transportation and storage of the compensator:
• During transportation and storage, the compensator must be protected from moisture and all manner of fouling.
• Storage must take place on a flat, firm timber base.
• Bending due to heavy connections components must be prevented by timber supports (not in way of the bellows).

MAINTENANCE OF THE COMPENSATORS

A correctly dimensioned and fitted compensator requires no special maintenance, it is however recommended that specific characteristics be observed during routine inspections, so as to avoid several damages.

1. Transportation and handling damage:
• Dents, abrasion and scratching due to incorrect handling.
• Corrosion due to unexpected environmental effects, such as salts, chemicals, etc.

2. Damage due to assembly faults:
• Installation of the compensator at a different position to that initially intended.
• Greater inaccuracies in the pipeline run than presumed.
• Premature or delayed remove of the assembly equipments.
• Installation of the compensator with baffle against the direction of flow.
• Bellows damaged by welding spatter.

3. Damage during use:
• Corrosion damage due to environmental effects, e.g. chloride.
• Corrosion damage, respectively limited movement due to a collection of firmly adhering dirt or due to hardening of the medium in the shafts.
• Fatigue failure due to unforeseen vibration or movement.

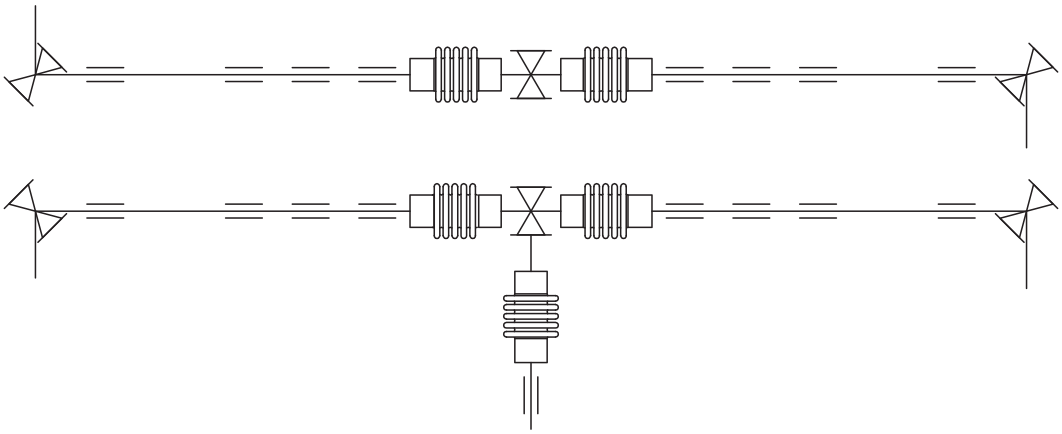

RUBBER EXPANSION JOINTS INSTALLATION MANUAL

1) For the installation of the joints to the pump, refer to the right illustration and install.When the check valve is installed before the joints from the pump,there is a possibility of some trouble occurrence due to accumulation of fatigue by water head pressure and direct water hammer when the pump starts and stops.

2) Install the joints within allowable movements of elong ation, compression, eccentricity, angular movement, etc.

3) When the joints are in displacement, note for the joints not to touch the structure and equipment (especially sharp edges) near the installation.

4) Take measurement and make centering correctly not to add unnecessary outer force (compression, tension, torsion, etc.) when connecting the joints to the pipes.

5) When welding or cutting the pipes nearby after installation, protect the joints with a cover (board or cloth) from sparks. In case of the possibility of heat transmission, take some countermeasure like taking the joints off from the pipe, etc.

6) When installation to the outdoor pipes, make lagging to the joints to prevent the joints body aging.

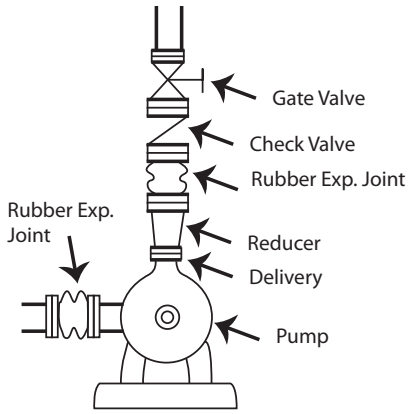

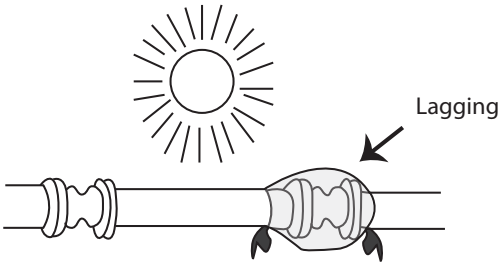

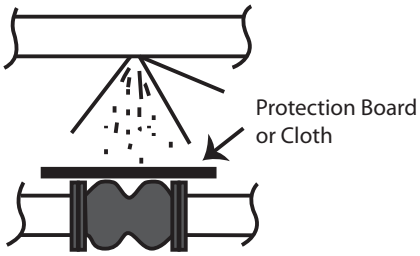

Pipe Expansion Joint Application

Pipe expansion joints provide axial movement absorption and maintain the pipeline security. A heating pipeline system at 90/70°C causes approximately 3 mm of movement for each floor of the buildings.

For the buildings higher than 10 floors, use of the pipe expansion joints becomes compulsory in order to absorbe total expansion amount. Pipe expansion joint application must be repeated for every 10 floors.

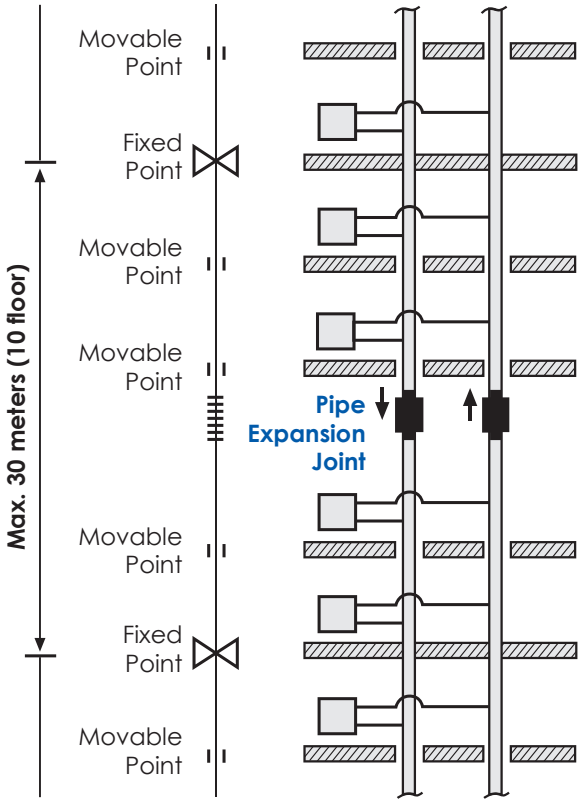

A MEMBER OF
EURO-QUALIFLEX

Scan this
QR Code
by your
smartphone!

To learn
how it
works:
ayvaz.com/qrcode

AYVAZ®

HEAD OFFICE - FACTORY
Atatürk Sanayi Bölgesi Hadımköy Mahallesi Mustafa İnan Caddesi No: 44 Arnavutköy - İSTANBUL
Tel: +90 212 771 01 45 (pbx) | Fax: +90 212 771 47 27

UKRAINE
Адрес:ул. В. Хвойки, 21
Киев – Украина, 04655
GSM :+ 380633080081
GSM: + 380674027785
E-mail: ukraine@ayvaz.com

ITALY
Via Lamberti (Ex Area Saint Gobain)
Edificio A4-81100 Caserta
Rosario Molaro
Tel: +39 0823 18 70 193
GSM: +39 329 43 28 810
E-mail: rmolaro@ayvaz.com

RUSSIA
Представительство 000
"Профресурс СП" Фактический
адрес: 142180 МО, г.Климовск, ул
Ленина д.1 корп.13
телефон: +7 (495) 995 17 28
GSM: +7 (926) 764 17 44
E-mail: ayvazrus@ayvaz.com

SAUDI ARABIA
B.O.Box 7402 Jeddah
21462
Jeddah -Al-Aziziyah,
Albaladiyah St.
Tel: 2635758 / 2830774
Fax: 6633076
ksa@ayvaz.com

info@ayvaz.com | www.ayvaz.com